WARNING

CAUTION

The safe operating temperature range for this product is 41° F. - 104 °F.

PLEASE READ THE ENTIRE CONTENTS OF THIS MANUAL PRIOR TO INSTALLATION AND OPERATION. BY PROCEEDING YOU AGREE THAT YOU FULLY UNDERSTAND AND COMPREHEND THE FULL CONTENTS OF THIS MANUAL. FORWARD THIS MANUAL TO ALL OPERATORS. FAILURE TO OPERATE THIS EQUIPMENT AS DIRECTED MAY CAUSE INJURY OR DEATH.

REV C 07-17-09
p/n 5900037

INSTALLATION AND OPERATION MANUAL

14,000 POUND CAPACITY COMMERCIAL GRADE FOUR-POST LIFTS

MODELS:
HD-14SS
HD-14
HD-14X
HD-14 TL

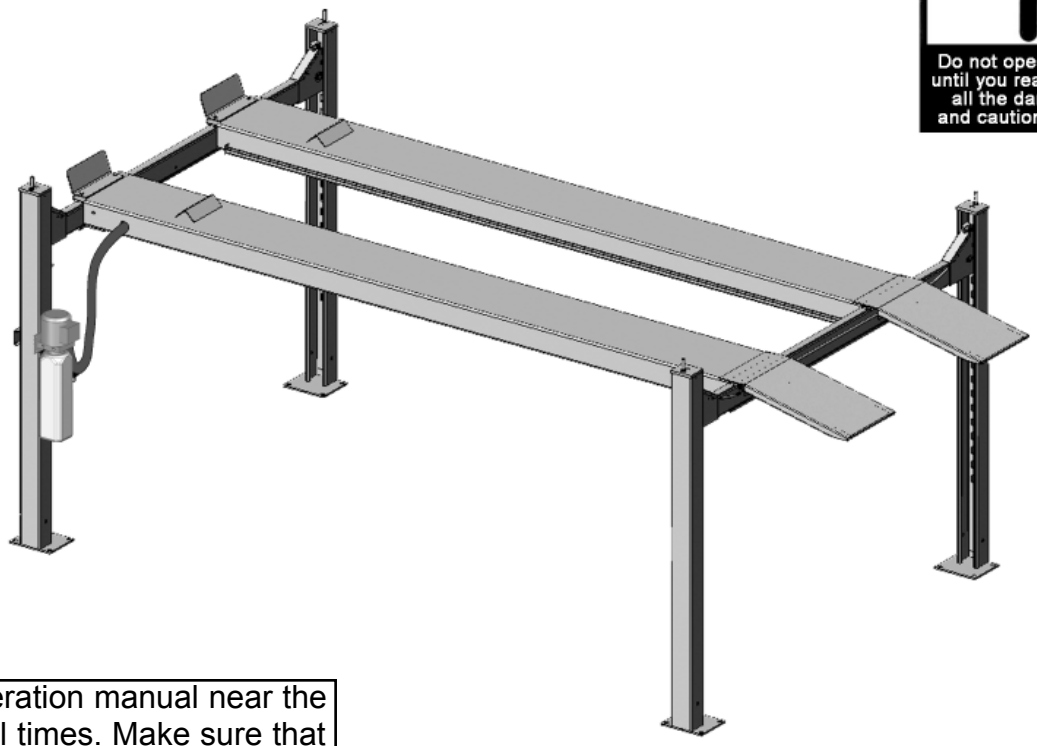

Keep this operation manual near the machine at all times. Make sure that ALL USERS read this manual.

SHIPPING DAMAGE CLAIMS

When this equipment is shipped, title passes to the purchaser upon receipt from the carrier. Consequently, claims for the material damaged in shipment must be made by the purchaser against the transportation company at the time shipment is received.

BE SAFE

Your new lift was designed and built with safety in mind. However, your overall safety can be increased by proper training and thoughtful operation on the part of the operator. DO NOT operate or repair this equipment without reading this manual and the important safety instructions shown inside.

BendPak®
PROVIDING AUTOMOTIVE SERVICE SOLUTIONS

1645 Lemonwood Dr.
Santa Paula, CA. 93060, USA
Toll Free 1-800-253-2363
Tel: 1-805-933-9970
Fax: 1-805-933-9160
www.bendpak.com

14,000 POUND CAPACITY, COMMERCIAL GRADE FOUR POST AUTO / TRUCK LIFT

This instruction manual has been prepared especially for you.
Your new lift is the product of over 35 years of continuous research, testing and development; it is the most technically advanced lift on the market today.

READ THIS ENTIRE MANUAL BEFORE INSTALLATION & OPERATION BEGINS.

RECORD HERE THE LIFT AND POWER UNIT INFORMATION WHICH IS LOCATED ON THE SERIAL NUMBER DATA PLATES ON THE LIFT AND ON THE POWER UNIT

Power Unit Model # _____
Power Unit Date Of Mfg. _____
Power Unit Serial # _____

This information is required when calling for parts or warranty issues.

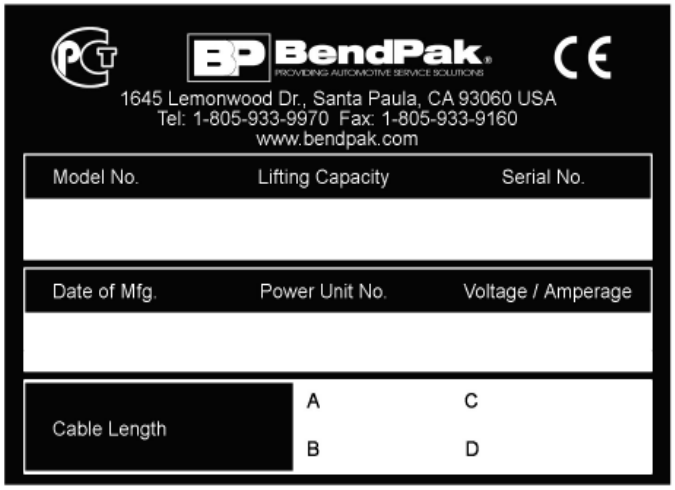

PRODUCT WARRANTY

BendPak 4-Post Lifts are covered under warranty for five years on equipment structure, to be free of defects in material and workmanship. Power units, hydraulic cylinders, and all other assembly components such as turnplates, slip plates, cables, chains, valves, switches etc. are covered under warranty for one year against defects in material or workmanship under normal use. BendPak Inc. shall repair or replace at their option for the warranty period those parts returned to the factory freight prepaid which prove upon inspection to be defective. BendPak Inc. will pay labor costs for the first 12 months only on parts returned as previously described.

The warranty does not extend to...

- ♦ defects caused by ordinary wear, abuse, misuse, shipping damage, improper installation, voltage or lack of required maintenance;
- ♦ damages resulting from purchaser's neglect or failure to operate products in accordance with instructions provided in the owner's manuals) and/or other accompanying instructions supplied;
- ♦ normal wear items or service normally required to maintain the product in a safe operating condition;
- ♦ any component damaged in shipment;
- ♦ other items not listed but may be considered general wear parts;
- ♦ damage caused by rain, excessive humidity, corrosive environments or other contaminants.

THESE WARRANTIES DO NOT EXTEND TO ANY COSMETIC DEFECT NOT INTERFERING WITH EQUIPMENT FUNCTIONALITY OR ANY INCIDENTAL, INDIRECT, OR CONSEQUENTIAL LOSS, DAMAGE, OR EXPENSE THAT MAY RESULT FROM ANY DEFECT, FAILURE, OR MALFUNCTION OF A BENDPAK INC. PRODUCT OR THE BREACH OR DELAY IN PERFORMANCE OF THE WARRANTY.

WARRANTY IS NOT VALID UNLESS WARRANTY CARD IS RETURNED.

IMPORTANT NOTICE

Do not attempt to install this lift if you have never been trained on basic automotive lift installation procedures. Never attempt to lift components without proper lifting tools such as forklift or cranes. Stay clear of any moving parts that can fall and cause injury. These instructions must be followed to insure proper installation and operation of your lift. Failure to comply with these instructions can result in serious bodily harm and void product warranty. Manufacturer will assume no liability for loss or damage of any kind, expressed or implied resulting from improper installation or use of this product.

PLEASE READ ENTIRE MANUAL PRIOR TO INSTALLATION.

DEFINITIONS OF HAZARD LEVELS

Identify the hazard levels used in this manual with the following definitions and signal words:

DANGER !

Watch for this symbol: It Means: Immediate hazards which will result in severe personal injury or death.

WARNING !

Watch for this symbol: It Means: Hazards or unsafe practices which could result in severe personal injury or death.

CAUTION !

Watch for this symbol: It Means: Hazards or unsafe practices which may result in minor personal injury, product or property damage.

OWNER'S RESPONSIBILITY

To maintain the lift and user safety, the responsibility of the owner is to read and follow these instructions:

- Follow all installation and operation instructions.
- Make sure installation conforms to all applicable Local, State, and Federal Codes, Rules, and Regulations; such as State and Federal OSHA Regulations and Electrical Codes.
- Carefully check the lift for correct initial function.
- Read and follow the safety instructions. Keep them readily available for machine operators.
- Make certain all operators are properly trained, know how to safely and correctly operate the unit, and are properly supervised.
- Allow unit operation only with all parts in place and operating safely.
- Carefully inspect the unit on a regular basis and perform all maintenance as required.
- Service and maintain the unit only with authorized or approved replacement parts.
- Keep all instructions permanently with the unit and all decals on the unit clean and visible.

BEFORE YOU BEGIN

Receiving:

The shipment should be thoroughly inspected as soon as it is received. The signed bill of lading is acknowledgement by the carrier of receipt in good condition of shipment covered by your invoice. If any of the goods called for on this bill of lading are shorted or damaged, do not accept them until the carrier makes a notation on the freight bill of the shorted or damaged goods. Do this for your own protection.

NOTIFY THE CARRIER AT ONCE if any hidden loss or damage is discovered after receipt and request the carrier to make an inspection. If the carrier will not do so, prepare a signed statement to the effect that you have notified the carrier (on a specific date) and that the carrier has failed to comply with your request.

IT IS DIFFICULT TO COLLECT FOR LOSS OR DAMAGE AFTER YOU HAVE GIVEN THE CARRIER A CLEAR RECEIPT. File your claim with the carrier promptly. Support your claim with copies of the bill of lading, freight bill, invoice, and photographs, if available. Our willingness to assist in helping you process your claim does not make BendPak responsible for collection of claims or replacement of lost or damaged materials.

TABLE OF CONTENTS

Contents Page No.

Warranty / Serial Number Information 2
Definitions of Hazard Levels 3
Owner's Responsibility 3
Before You Begin 3
Installer Operator/ Protective Equipment 5
Introduction 6
Safety / Warning Instructions 6
Tools Required 7
Step 1 / Selecting Site 7
Step 2 / Floor Requirements 7
Concrete Specifications 7
Assembly View / Description of Parts 8
Floor Plan / Specifications 9
Power Unit Location 10
Step 3 / Column and Cross Tube Installation 11-12
Step 4 / Raising the Cross Tubes 12
Step 5 / Powerside Runway Installation 13
Step 6 / Offside Runway Installation 13
Step 7 / Cable Sheave Installation 14-16
Step 8 Cable Installation 15-16
Step 9 / Power Unit Installation 16-17
Step 10 / Routing Hydraulic Hoses 17-18
Step 11 / Routing Air Lines 19
Step 12 / Power Unit Hook Up 20-22
Step 13 / Inspecting Slack Safety Springs 22
Step 14 / Lift Start Up / Final Adjustments 22-23
Step 15 / Anchoring The Columns 23-24
Step 16 / Attaching Approach Ramps / Tire stops 24
Step 17 / Leveling System 24-25
Step 18 Bleeding 26
Optional Equipment Installation 27-28
Step 19 / Operation/ Maintenance 29-34
Troubleshooting Guide 35-39
Installation Form 40
Part Number Lists 41-47

INSTALLER / OPERATOR PLEASE READ AND FULLY UNDERSTAND. BY PROCEEDING YOU AGREE TO THE FOLLOWING.

♦ I have visually inspected the site where the lift is to be installed and verified the concrete to be in good condition and free of cracks or other defects. I understand that installing a lift on cracked or defective concrete could cause lift failure resulting in personal injury or death.

♦ I understand that a level floor is required for proper installation and level lifting.

♦ I understand that I am responsible if my floor is of questionable slope and that I will be responsible for all charges related to pouring a new level concrete slab if required and any charges.

♦ I understand that the lifts are supplied with concrete fasteners meeting the criteria of the American National Standard “Automotive Lifts - Safety Requirements for Construction, Testing, and Validation” ANSI/ALI ALCTV-1998, and that I will be responsible for all charges related to any special regional structural and/or seismic anchoring requirements specified by any other agencies and/or codes such as the Uniform Building Code (UBC) and/or International Building Code (IBC).

♦ I will assume full responsibility for the concrete floor and condition thereof, now or later, where the above equipment model(s) are to be installed. Failure to follow danger, warning, and caution instructions may lead to serious personal injury or death to operator or bystander or damage to property.

♦ I understand that Bendpak lifts are designed to be installed in indoor locations only. Failure to follow installation instructions may lead to serious personal injury or death to operator or bystander or damage to property or lift.

DANGER

Failure to follow danger, warning, and caution instructions may lead to serious personal injury or death to operator or bystander or damage to property.

WARNING

Please read entire manual prior to installation. Do not operate this machine until you read and understand all the dangers, warnings and cautions in this manual. For additional copies or further information, contact:

BendPak Inc. / Ranger Products

1645 Lemonwood Dr.

Santa Paula, CA. 93060

1-805-933-9970

www.bendpak.com

INSTALLER / OPERATOR PROTECTIVE EQUIPMENT

Personal protective equipment helps makes installation and operation safer, however, it does not take the place of safe operating practices. Always wear durable work clothing during any installation and/or service activity. Shop aprons or shop coats may also be worn, however loose fitting clothing should be avoided. Tight fitting leather gloves are recommended to protect technician hands when handling parts. Sturdy leather work shoes with steel toes and oil resistant soles should be used by all service personnel to help prevent injury during typical installation and operation activities.

Eye protection is essential during installation and operation activities. Safety glasses with side shields, goggles, or face shields are acceptable. Back belts provide support during lifting activities and are also helpful in providing worker protection. Consideration should also be given to the use of hearing protection if service activity is performed in an enclosed area, or if noise levels are high.

THIS SYMBOL POINTS OUT IMPORTANT SAFETY INSTRUCTIONS WHICH IF NOT FOLLOWED COULD ENDANGER THE PERSONAL SAFETY AND/OR PROPERTY OF YOURSELF AND OTHERS AND CAN CAUSE PERSONAL INJURY OR DEATH. READ AND FOLLOW ALL INSTRUCTIONS IN THIS MANUAL BEFORE ATTEMPTING TO OPERATE THIS MACHINE.

INTRODUCTION

1. Carefully remove the crating and packing materials. **CAUTION!** Be careful when cutting steel banding material as items may become loose and fall causing personal harm or injury.

2. Check the voltage, phase and proper amperage requirements for the motor shown on the motor plate. Wiring should be performed by a certified electrician only.

IMPORTANT SAFETY INSTRUCTIONS !

Read these safety instructions entirely!

IMPORTANT NOTICE !

Do not attempt to install this lift if you have never been trained on basic automotive lift installation procedures.
Never attempt to lift components without proper lifting tools such as forklift or cranes.
Stay clear of any moving parts that can fall and cause injury.

1. **READ AND UNDERSTAND** all safety warning procedures before operating lift.

2. **KEEP HANDS AND FEET CLEAR**. Remove hands and feet from any moving parts. Keep feet clear of lift when lowering. Avoid pinch points.

3. **KEEP WORK AREA CLEAN**. Cluttered work areas invite injuries.

4. Consider work area environment. Do not expose equipment to rain. **DO NOT** use in damp or wet locations. Keep area well lighted.

5. **ONLY TRAINED OPERATORS** should operate this lift. All non-trained personnel should be kept away from work area. Never let non-trained personnel come in contact with, or operate lift.

6. **USE LIFT CORRECTLY**. Use lift in the proper manner. Never use lifting adapters other than what is approved by the manufacturer.

7. **DO NOT** override self-closing lift controls.

8. **REMAIN CLEAR** of lift when raising or lowering vehicle.

9. **CLEAR AREA** if vehicle is in danger of falling.

10. **ALWAYS INSURE** that the safeties are engaged before any attempt is made to work on or near vehicle.

11. **DRESS PROPERLY**. Non-skid steel-toe footwear is recommended when operating lift.

12. **GUARD AGAINST ELECTRIC SHOCK**. This lift must be grounded while in use to protect the operator from electric shock. Never connect the green power cord wire to a live terminal. This is for ground only.

13. **DANGER!** The power unit used on this lift contains high voltage. Disconnect power at the receptacle before performing any electrical repairs. Secure plug so that it cannot be accidentally plugged in during service.

14. **WARNING! RISK OF EXPLOSION**. This equipment has internal arcing or sparking parts which should not be exposed to flammable vapors. This machine should not be located in a recessed area or below floor level.

15. **MAINTAIN WITH CARE**. Keep lift clean for better and safer performance. Follow manual for proper lubrication and maintenance instructions. Keep control handles and/or buttons dry, clean and free from grease and oil.

16. **STAY ALERT**. Watch what you are doing. Use common sense. Be aware.

17. **CHECK FOR DAMAGED PARTS**. Check for alignment of moving parts, breakage of parts or any condition that may affect its operation. Do not use lift if any component is broken or damaged.

18. **NEVER** remove safety related components from the lift. Do not use lift if safety related components are damaged or missing.

TOOLS REQUIRED

- Rotary Hammer Drill or Similar
- 3/4" Masonry Bit
- Hammer
- 4 Foot Level
- Open-End Wrench Set: SAE/Metric
- Socket And Ratchet Set: SAE/Metric
- Hex-Key / Allen Wrench Set
- Large Crescent Wrench
- Large Pipe Wrench
- Crow Bar
- Chalk Line
- Medium Flat Screwdriver
- Tape Measure: 25 Foot Minimum
- Needle Nose Pliers

IMPORTANT NOTICE !

These instructions must be followed to insure proper installation and operation of your lift. Failure to comply with these instructions can result in serious bodily harm and void product warranty. Manufacturer will assume no liability for loss or damage of any kind, expressed or implied resulting from improper installation or use of this product.

PLEASE READ ENTIRE MANUAL PRIOR TO INSTALLATION!

STEP 1

(Selecting Site)

Before installing your new lift, check the following.

1. **LIFT LOCATION**: Always use architects plans when available. Check layout dimension against floor plan requirements making sure that adequate space if available.

2. **OVERHEAD OBSTRUCTIONS**: The area where the lift will be located should be free of overhead obstructions such as heaters, building supports, electrical lines etc.

3. **DEFECTIVE FLOOR**: Visually inspect the site where the lift is to be installed and check for cracked or defective concrete.

⚠ CAUTION

4. **OPERATING TEMPERATURE.** Operate lift only between temperatures of 41° -104° F.

5. Lift is designed for **INDOOR INSTALLATION ONLY.**

STEP 2

(Floor Requirements)

⚠ WARNING

This lift must be installed on a solid level concrete floor with no more than 3-degrees of slope. Failure to do so could cause personal injury or death.

A level floor is suggested for proper use and installation and level lifting. If a floor is of questionable slope, consider a survey of the site and/or the possibility of pouring a new level concrete slab.

⚠ DANGER

- **DO NOT** install or use this lift on any asphalt surface or any surface other than concrete.
- **DO NOT** install or use this lift on expansion seams or on cracked or defective concrete.
- **DO NOT** install or use this lift on a second / elevated floor without first consulting building architect.
- **DO NOT** install or use this lift outdoors.

CONCRETE SPECIFICATIONS

LIFT MODEL	CONCRETE REQUIREMENTS
HD-14SS	4" Min. Thickness / 3,000 PSI
HD-14	4" Min. Thickness / 3,000 PSI
HD-14X	4" Min. Thickness / 3,000 PSI
HD-14TL	4" Min. Thickness / 3,000 PSI

⚠ DANGER

DANGER!

All models MUST be installed on 3000 PSI concrete only conforming to the minimum requirements shown above. New concrete must be adequately cured by at least 28 days minimum.

Assembly View

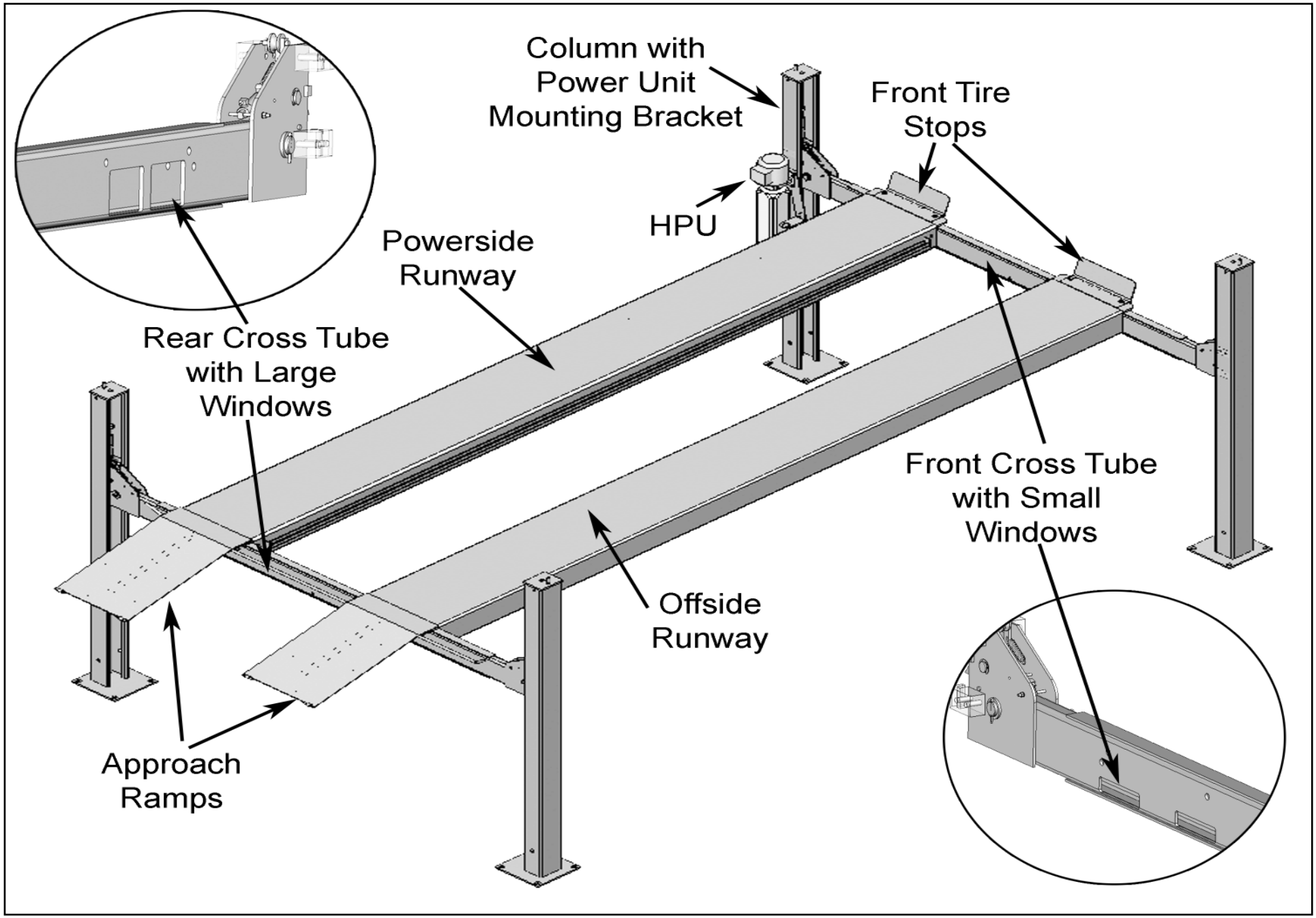

FLOOR PLAN

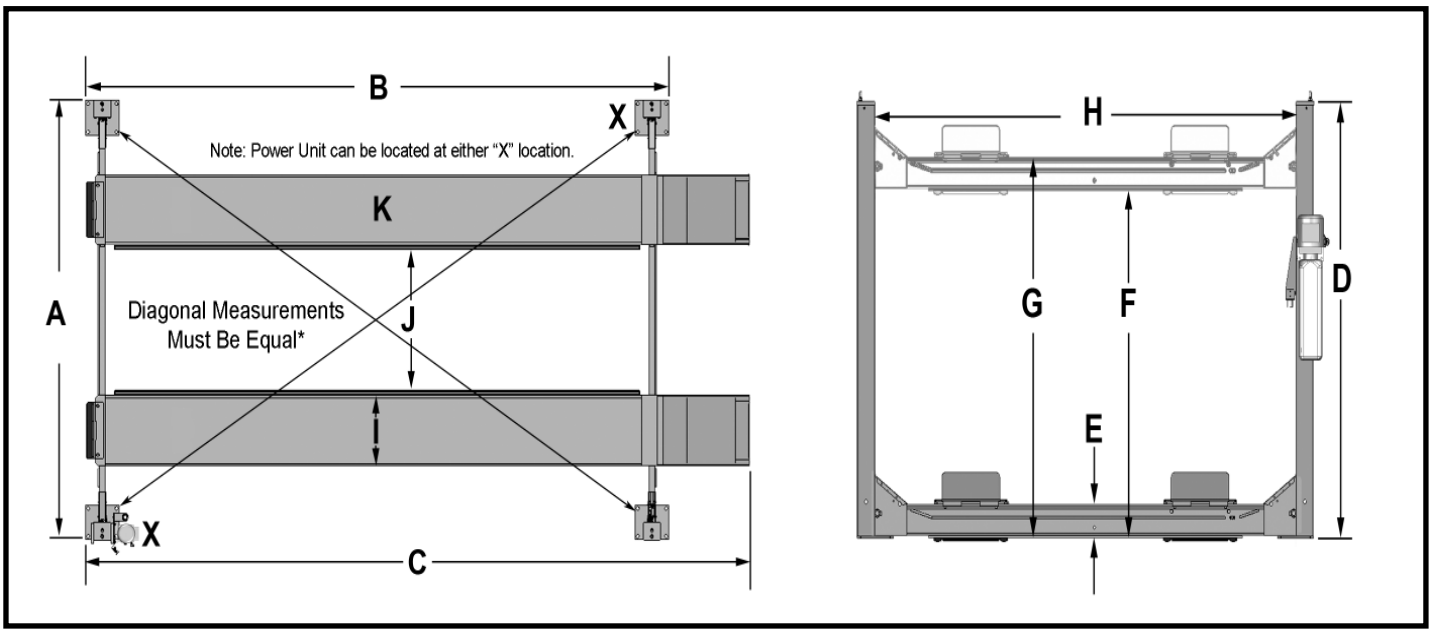

IMPORTANT NOTE
Check Diagonal Measurements To Ensure Square Layout Diagonal Measurements Must Be Equal.

MODEL	HD-14SS	HD-14	HD-14X	HD-14TL
Lifting Capacity	14,000lbs / 6350 Kg.	14,000 /6350 Kg.	14,000 Lbs. / 6350 Kg.	14,000lbs / 6350 Kg.
Max Capacity Front Axle	7,000 lbs. / 3175 Kg.	7,000 lbs. / 3175 Kg.	7,000 lbs. / 3175 Kg.	7,000 lbs. / 3175 Kg.
Max Capacity Rear Axle	7,000 lbs. / 3175 Kg.	7,000 lbs. / 3175 Kg.	7,000 lbs. / 3175 Kg.	7,000 lbs. / 3175 Kg.
A - Overall Width	126"/ 3200 mm	126"/ 3200 mm	126"/ 3200 mm	126"/ 3200 mm
B- Outside Length	181" / 4597 mm	205" / 5207 mm	243" / 6172 mm	205" / 5207 mm
C- Overall Length	211" / 5360 mm	235" / 5969 mm	273" / 6934 mm	235" / 5969 mm
D- Height of Columns	88" / 2235 mm	88" / 2235 mm	88" / 2235 mm	100" / 2540mm
E- Min Runway Height	7.5"/ 190 mm	7.5" / 190mm	7.5" / 190 mm	7.5"/ 190 mm
F- Max. Rise	70" / 1778 mm	70" / 1778 mm	70" / 1778 mm	82" / 2083 mm
G- Max Lifting Height	77.5" / 1968 mm	77.5" / 1968 mm	77.5" / 1968 mm	89.5" / 2273 mm
H- Width Between Columns	116" / 2946 mm	116" / 2946 mm	116" / 2946 mm	116" / 2946 mm
I- Runway Width	20" / 508 mm	20" / 508 mm	20" / 508 mm	20" / 508 mm
J - Width Between Runways(*)	37 - 49" 940 mm - 1245mm	37" - 49" 940 mm - 1245mm	37" - 49" 940 mm - 1245mm	37 - 49" 940 mm - 1245mm
K- Length of Runways	174" / 4420 mm	198" / 5029 mm	236" 5994 mm	198" / 5029 mm
Min. Wheelbase @ Rated Capacity	125" / 3175 mm	140" / 3556 mm	170" / 4318 mm	140" / 3556 mm
Min. Wheelbase @ 75%Rated Capacity	105" / 2667 mm	120" / 3048 mm	145" / 3683 mm	120" / 3048 mm
Min. Wheelbase @ 50%Rated Capacity	90" / 2286 mm	100" / 2540 mm	120" / 3048 mm	100" /2540 mm
Min. Wheelbase @ 25%Rated Capacity	70" / 1778 mm	80" / 2032 mm	95" / 2413 mm	80" / 2032 mm
Locking Positions	13	13	13	17
Lock Spacing	Every 4" / 102 mm	Every 4" / 102 mm	Every 4" / 102 mm	Every 4" / 102 mm
Lifting Time	60 Seconds	60 Seconds	60 Seconds	60 Seconds
Standard Motor(**)	220 VAC / 60Hz 1 Ph.	220 VAC / 60Hz 1 Ph.	220 VAC / 60Hz 1 Ph.	220 VAC / 60Hz 1 Ph.
* This dimension may be limited with the addition of rolling jacks. See Rolling Jack Specifications on Separate page.				
** Special Voltages Available upon Request.				
The design, material and specifications are subject to change without notice.				

POWER UNIT LOCATION

IMPORTANT NOTE !

The Power Unit can be located at either "X" location shown below. It is important to locate the POWERSIDE runway (with cylinder) on the SAME SIDE as the Power Unit location. Each Runway MUST be installed with the Utility Rails to the inside.

For the remainder of this instruction we will illustrate the Power Unit mounted at the DRIVER-SIDE (LEFT) FRONT column - TOP ILLUSTRATION. For Power Unit at right rear, rotate lift 180° leaving approach Ramps and Front Tire Stops in original position.

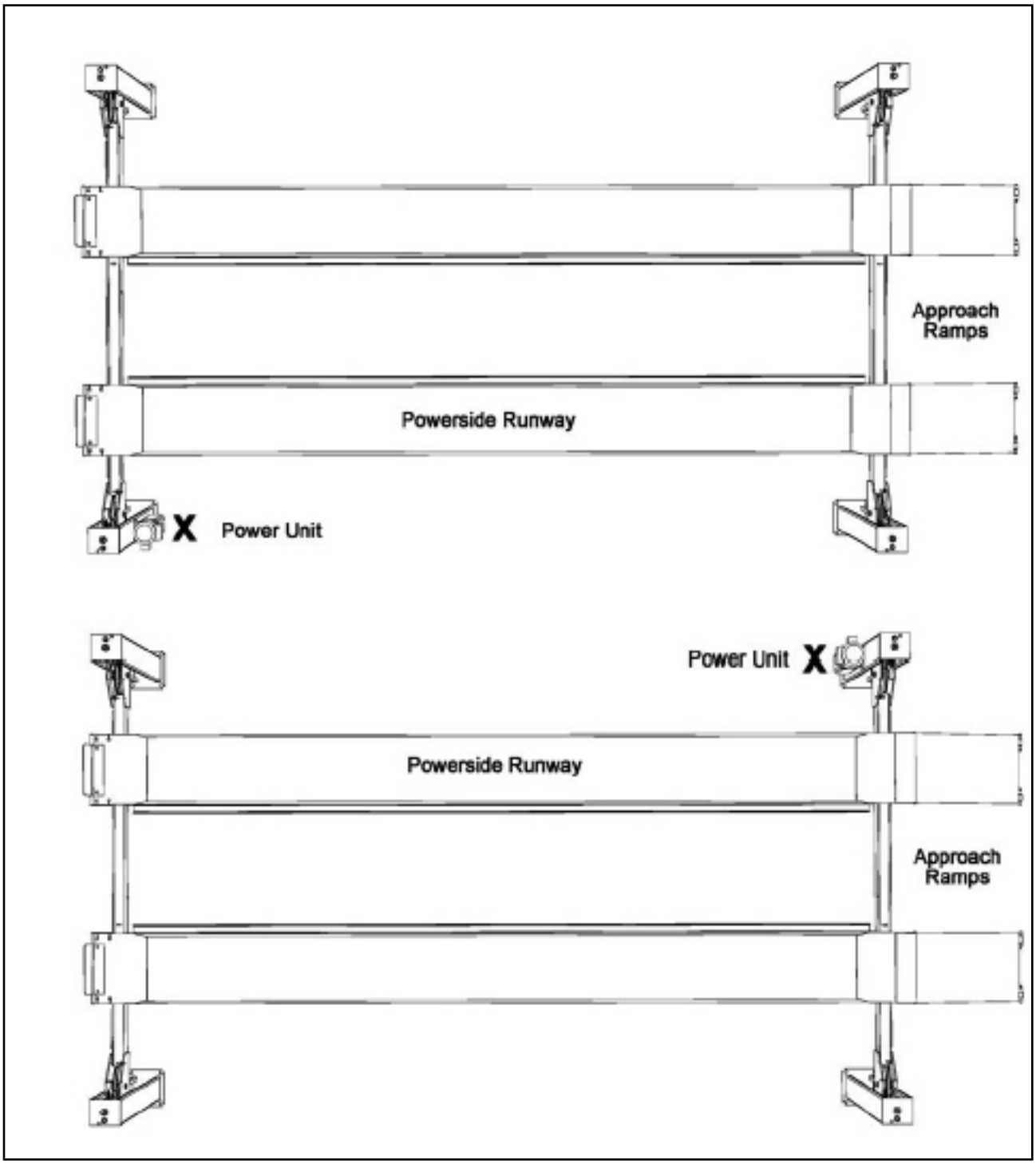

STEP 3

(Column & Cross Tube Installation)

1. Place a chalk line on the floor according to the floor plan layout. Pay attention to the Power Unit location. Locate and stand the Columns at their respective locations. **DO NOT BOLT** Columns down at this time. Use caution to prevent the Columns from falling over. (See Fig. 3.1)

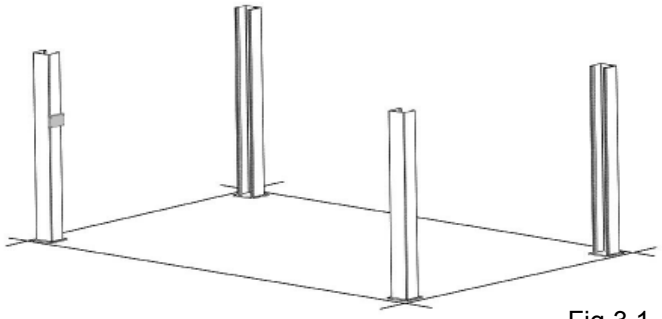

Fig 3.1

2. To estimate the shim requirements, place a target on floor at each Column position and record the readings. Find the highest of the four locations then find the difference between each of the remaining Columns. This difference is the estimated amount of shim thickness that will be required at each Column. (See Fig. 3.2)

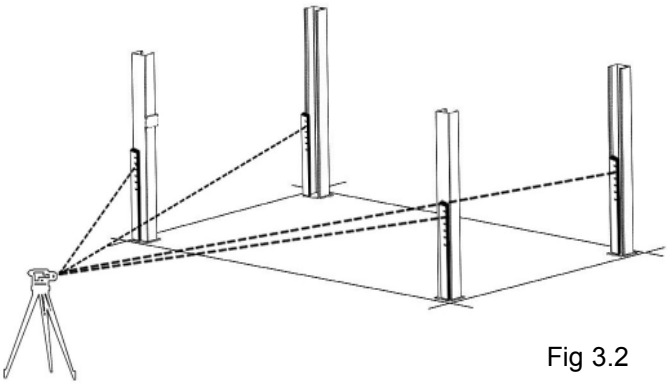

Fig 3.2

Note: The maximum shim thickness recommended by the factory is no more than 1/2" per Column using shims and anchors provided with the lift. A maximum shim thickness of 2" is possible by ordering optional Shim Plates. Contact your authorized BendPak Distributor for ordering information.

3. Using a forklift or crane, raise the Cross Tubes (making sure the Plastic Slide Blocks are still in position) and drop down into the top of the Columns. NOTE: The sheave windows should be positioned inward and adjacent the Power unit Column. (See Fig. 3.3)

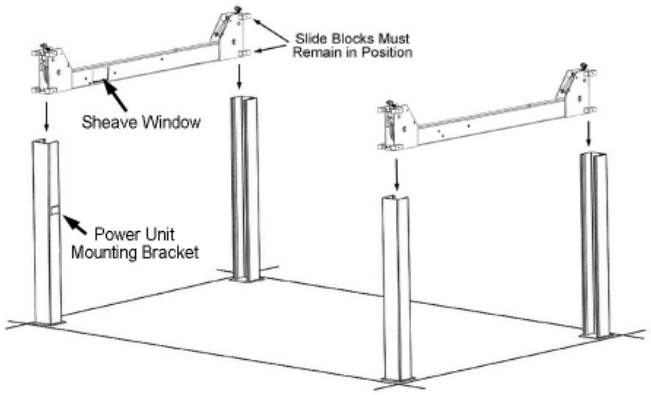

Fig 3.3

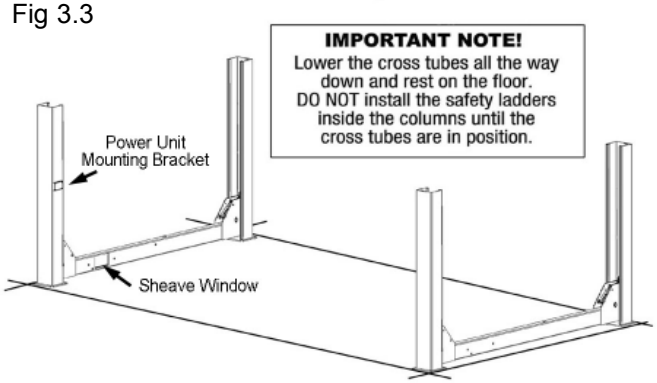

4. With the Columns standing and the Cross Tubes in position, install the Safety Ladders. Pass the Ladders through the Column openings and drop down through the Slide Block guide slots on the cross tube until the Ladders come to rest on the Base Plates. **DO NOT BOLT** Columns down at this time. (See Fig. 3.4 - 3.5)

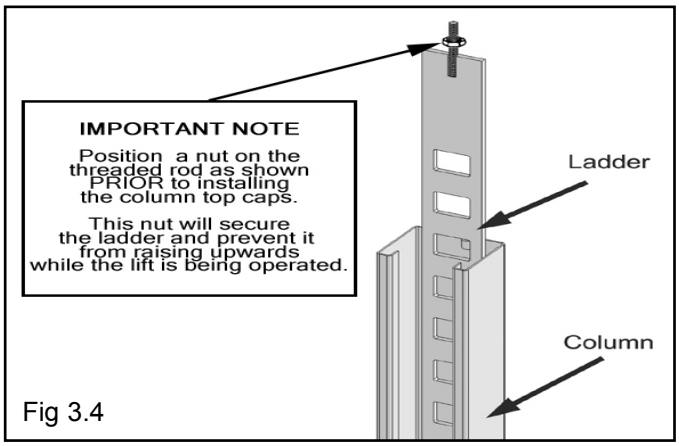

Fig 3.4

Fig 3.5

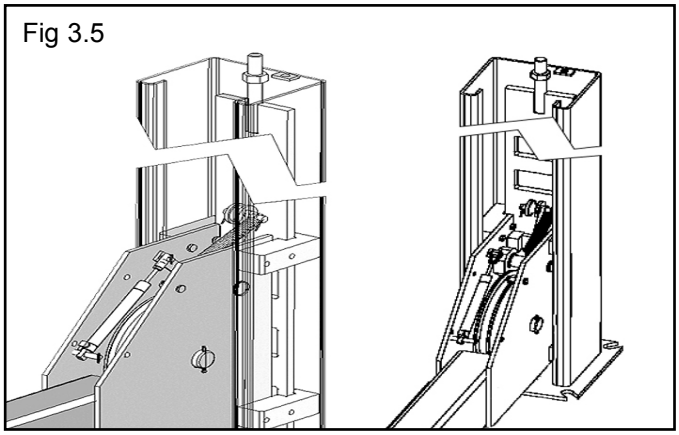

5. The Columns and Cross Tubes will now be in position and spaced properly for the runways.

6. Install the column TOP CAPS using the M16 X 2 Hex Bolts, nuts & washers. Install the nut on each Safety Ladder until 1/2" of threads are exposed and the Ladder is raised at least 1/2" off of the base of the Column.
NOTE: Raise the Ladder at least 1/2" off of the base of the column or damage to the lift will occur. Be sure to position the Cable hole INWARD. (See Fig. 3.6 - 3.7)

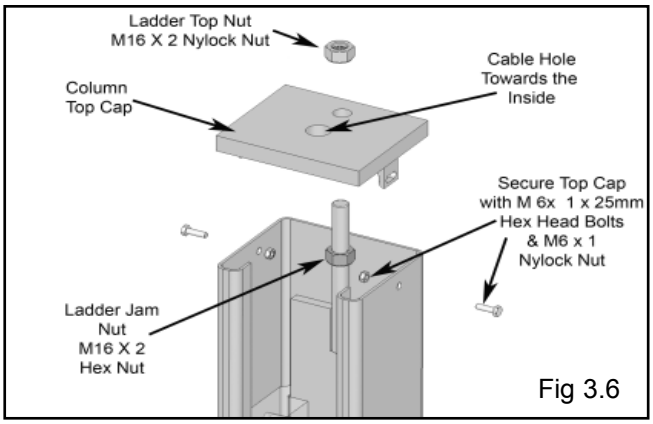

Fig 3.6

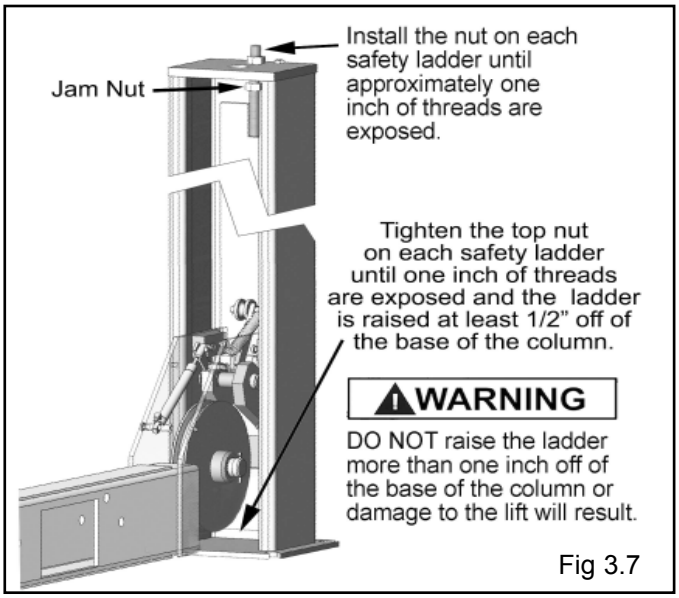

Fig 3.7

STEP 4

(Raising The Cross Tubes)

1. Before proceeding it will be necessary to first raise the Cross Tubes off the ground to facilitate Cable routing and final assembly.

DANGER

DANGER!
Be careful not to disturb the Columns and Cross Tubes as they may tip over causing personal injury or harm

IMPORTANT NOTE !
It is important that the SLACK SAFETY LOCK IS CLEARED. The slack safety lock must never rest on the safety ladder.

2. Manually raise the Cross Tubes until the Primary Safety Locks engage and rest on the lock position second down from the top of the Ladder or approximately 66" off the ground. It is important that the SLACK SAFETY LOCK IS CLEARED. The Slack Safety Lock must never rest on the Safety Ladder. (See Fig. 4.1.

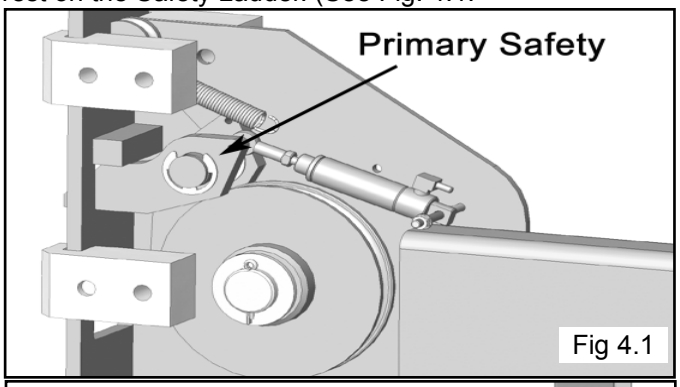

Fig 4.1

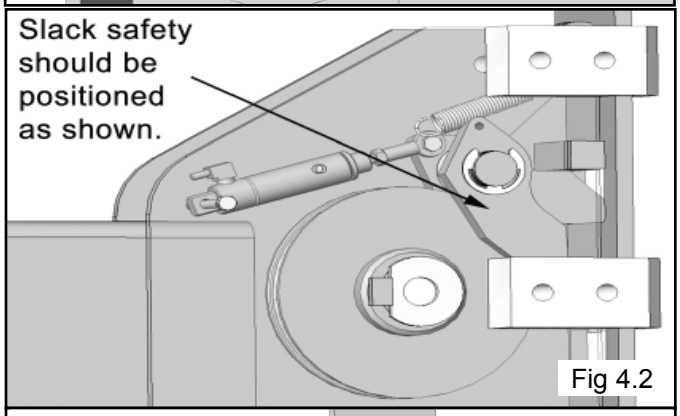

Fig 4.2

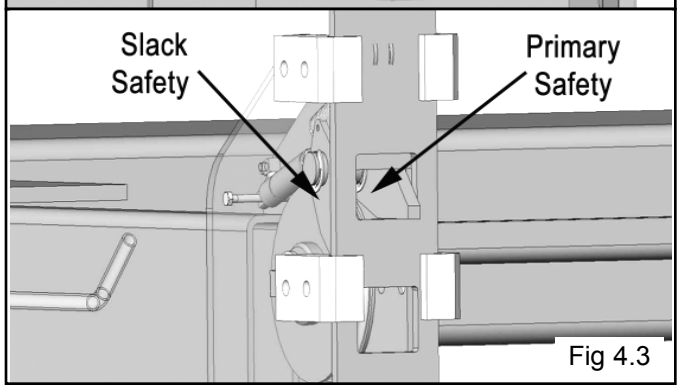

Fig 4.3

3. The Columns and Cross Tubes will now be in position and spaced properly for the Runways. Be very careful not to disturb the Columns and Cross Tubes at this time as they may tip over causing personal injury or harm. (See Fig. 4.4)

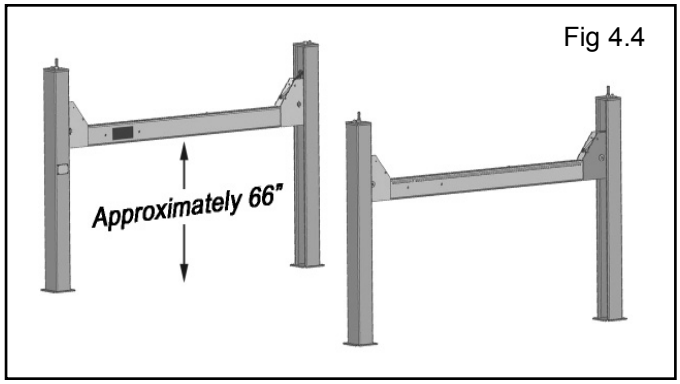

Fig 4.4

STEP 5

(Powerside Runway Installation)

1. Locate the Powerside Runway easily identified by the Cylinder and sheave roller mounting structures welded on the underside. The Powerside Runway will be positioned on the side of the lift where the power unit is installed. (See Fig. 5.1)

Fig 5.1

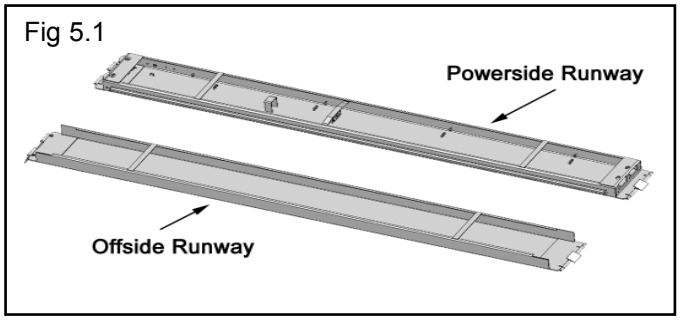

2. Install Cylinder and Cable Block as shown. (See Fig. 5.2-5.3)

Fig 5.2

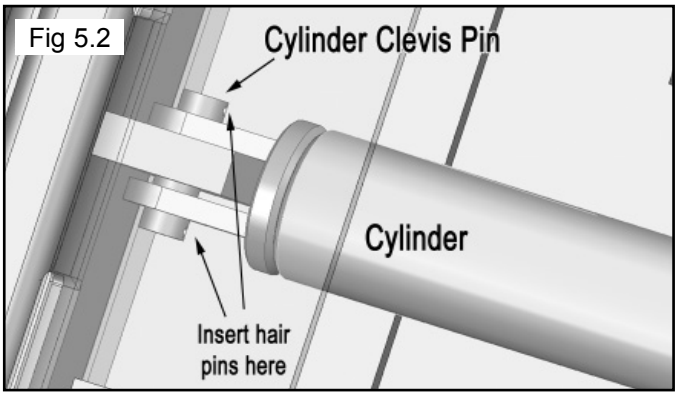

Fig 5.3

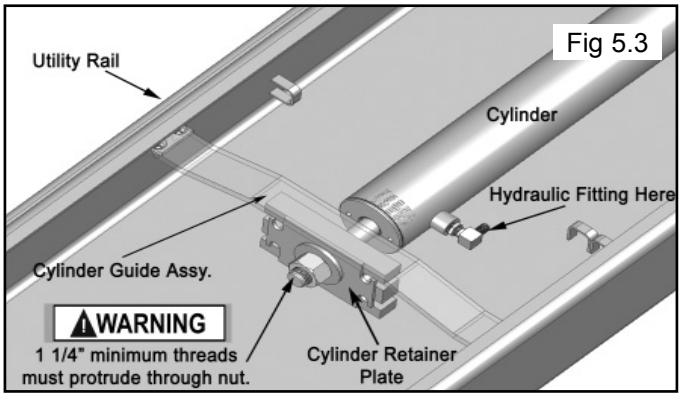

3. Remove any pre-installed Cable Sheaves from the Powerside Runway making sure to pay attention to the order in which they are removed. (This will help at the time of re-installation.) (See Page 14.)

4. Position the Powerside Runway on top of the Cross Tubes with the Utility Rail towards the center. The fitting holes located at the side of the Powerside Runway should be adjacent to the Power Unit Column. Align the holes in the runway with the holes on the Cross Tubes and bolt together using four M12 x 1.75 x 90 hex bolts and washers. ~~Tighten to 80 ftl/lbs~~. (See Fig. 5.4)

Fig 5.4

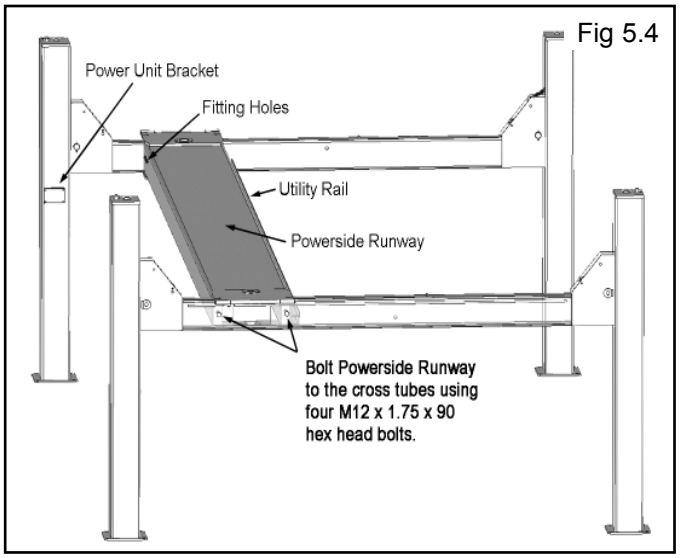

STEP 6

(Offside Runway Installation)

1. Position the Offside Runway on top of the Cross Tubes with the Utility Rail located inside. (See Fig. 6.1)

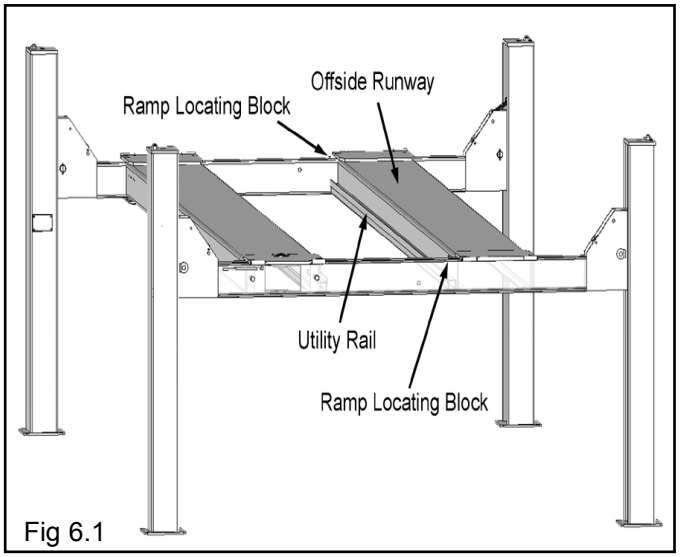

Fig 6.1

DANGER

DANGER !

DO NOT PROCEED with Cable installation or go near the lift work area unless visual confirmation is made of ALL Safety Locks. ALL locks MUST be engaged before proceeding. Failure to comply with these instructions may result in severe personal injury or death. (See page 12.)

	Model	Part #	Description
A	HD-14TL	5595139	HD-14T 12 x 3,665mm, Cable "A"
B	HD-14TL	5595184	HD-14T 12 x 5,270mm, Cable "B"
C	HD-14TL	5595186	HD-14T 12 x 8,590mm, Cable "C"
D	HD-14TL	5595187	HD-14T 12 x 10,190mm, Cable "D"

	Model	Part #	Description
A	HD-14	5595044	HD-14/14LSX, HDO-14/LSX 12 x 3,970mm, Cable "A"
B	HD-14	5595039	HD-14/14LSX, HDO-14/LSX 12 x 5,575mm, Cable "B"
C	HD-14	5595045	HD-14/14LSX 12 x 8,895mm, Cable "C"
D	HD-14	5595046	HD-14/14LSX 12 x 10,495mm, Cable "D"
A	HD-14SS	5595040	HD-14LS / 14SS 12 x 3,355mm, Cable "A"
B	HD-14SS	5595041	HD-14LS / 14SS 12 x 4,970mm, Cable "B"
C	HD-14SS	5595042	HD-14LS / 14SS 12 x 7,675mm, Cable "C"
D	HD-14SS	5595043	HD-14LS / 14SS12 x 9,280mm, Cable "D"
A	HD-14X	5595004	HD-14LSXE / 14X 12 x 4,935mm, Cable "A"
B	HD-14X	5595002	HD-14LSXE / 14X 12 x 6,540mm, Cable "B"
C	HD-14X	5595008	HD-14LSXE/ 14X 12 x 10,820mm, Cable "C"
D	HD-14X	5595006	HD-14LSXE / 14X 12 x 12,425mm, Cable "D"

IMPORTANT
It will be necessary to remove the pins, and spacers prior to cable installation.
You MUST re-install these components back in the same order as they are removed

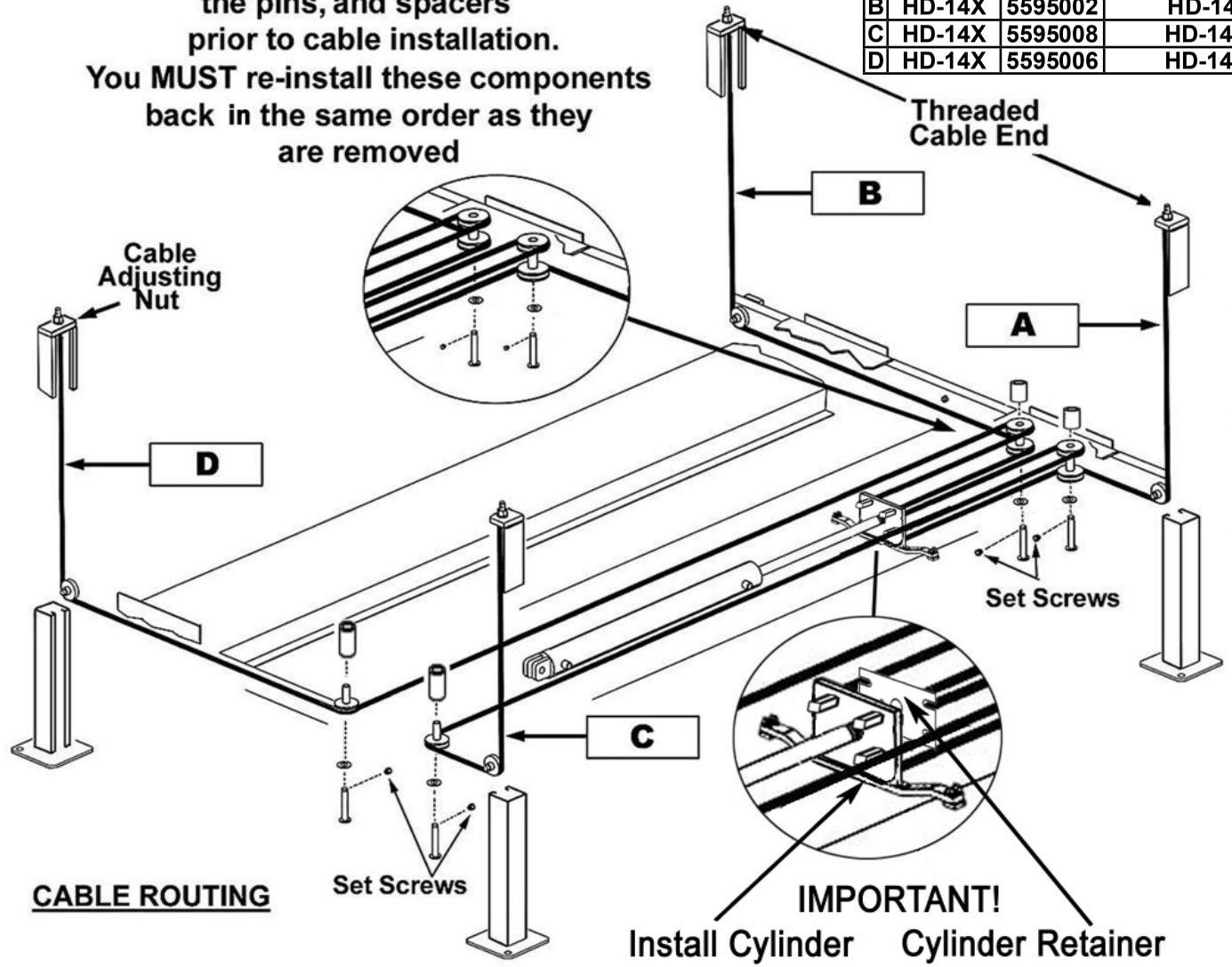

CABLE ROUTING

IMPORTANT!
Install Cylinder Guide As Shown
Cylinder Retainer Plate This side

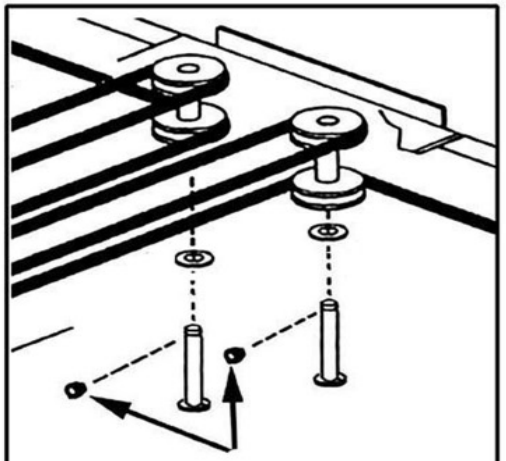

CAUTION!
Tighten shaft set screws securely after routing cables. Failure to do so may result in injury or damage to lift.

STEP 7

(Cable / Sheave Installation)

1. Inspect Cables to insure proper lengths. All Cables should have ID tags showing proper Cable lengths.

2. In order to install the Cables it is necessary to first extend the Hydraulic Cylinder. Remove both Cylinder port plugs then use an air gun or come-along to extend the Cylinder.

IMPORTANT! - Be careful not to damage the chrome rod during this step. (See Fig. 7.1)

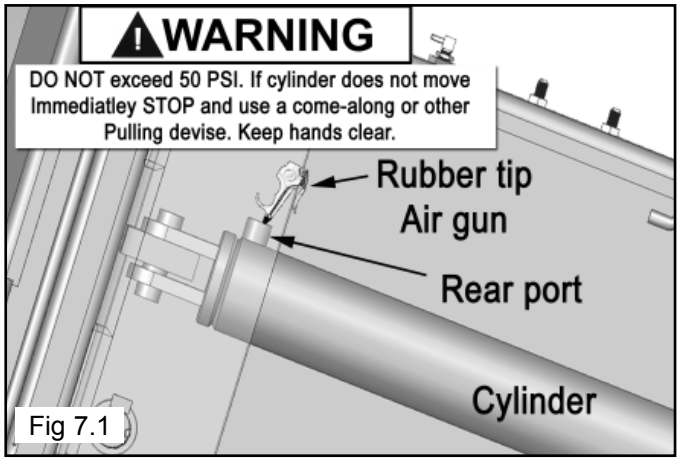

Fig 7.1

3. You must reinstall the Sheaves, and Pins in the same order as they are removed. (See Fig. 7.2)

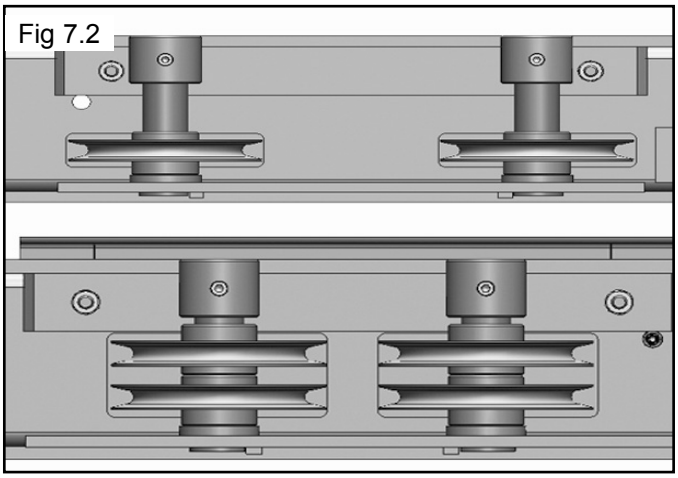
Fig 7.2

DANGER

DANGER!

DO NOT PROCEED unless visual confirmation is made of ALL Safety Locks. ALL Locks MUST be engaged before proceeding. Failure to comply with these instructions may result in severe personal injury or death. (See page 11.)

DANGER

DANGER!

Failure to route lifting cables as described may lead to serious personal injury and/or death to operator or bystander and/or may cause damage to property.

STEP 8

(Cable Installation)

1. Make sure the Cylinder flange plate is installed with the guide assembly facing down and the Cylinder Retainer plate on the outside of the guide. Lug ends of Cables start at Cylinder. (See Fig. 8.1)

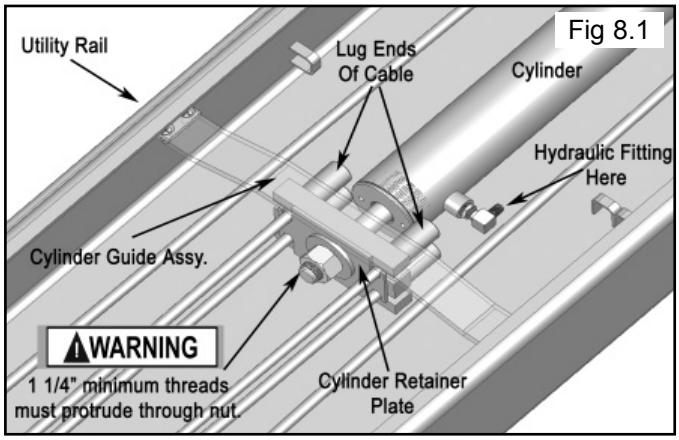

Fig 8.1

2. Route the threaded Cable ends through the ends of each Cross Tube, over the Slack Safety Sheave then to the top of each Column. Secure using the M22 hex nuts and flat washers. Tighten each nut until there is at least one inch of threads protruding through the top of the nut. The Cables will remain loose until start up and final Cable adjustments are made. (See Fig. 8.2 - 8.3)

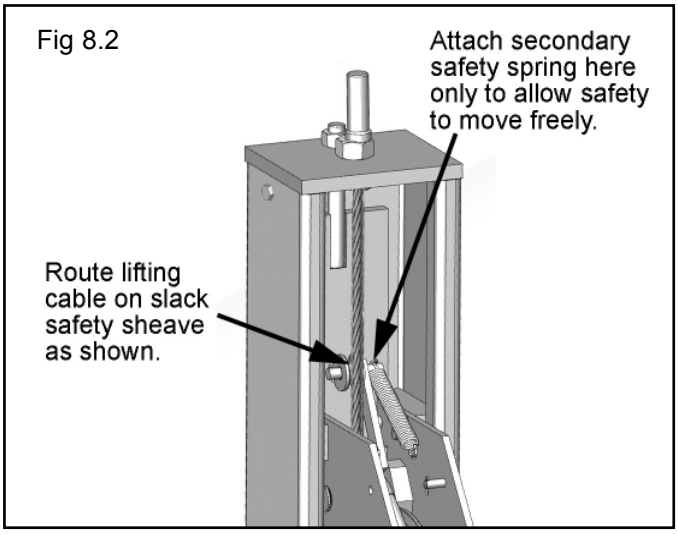

Fig 8.2

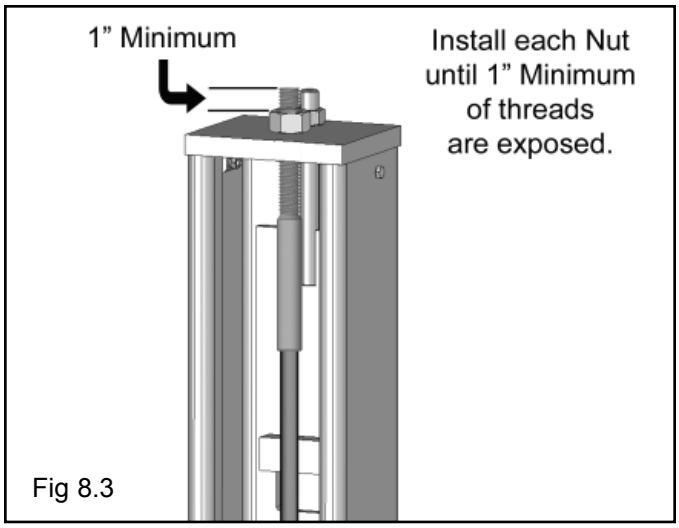

Fig 8.3

3. After routing the Cables double-check to make sure all are properly positioned and remain within the grooves of ALL Sheaves. (See Fig. 8.4 - 8.5)

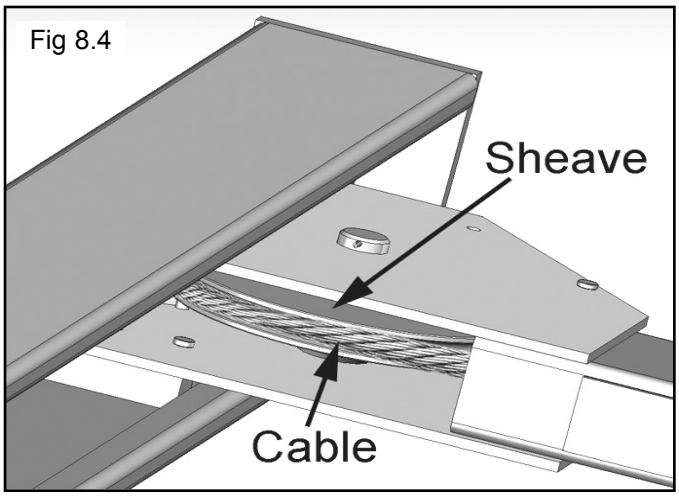

Fig 8.4

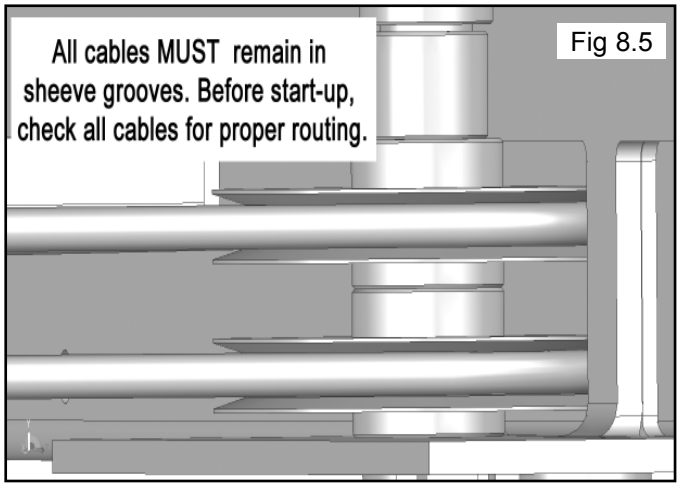

Fig 8.5

STEP 9

(Power Unit Installation)

1. . Mount the Power Unit, the Flex Tube Mounting Bracket, the Vibration Dampener and the Air Valve Mounting Bracket to the Power Unit Mounting Bracket using the M8 hex bolts and nylon nuts. (See Fig. 9.1)

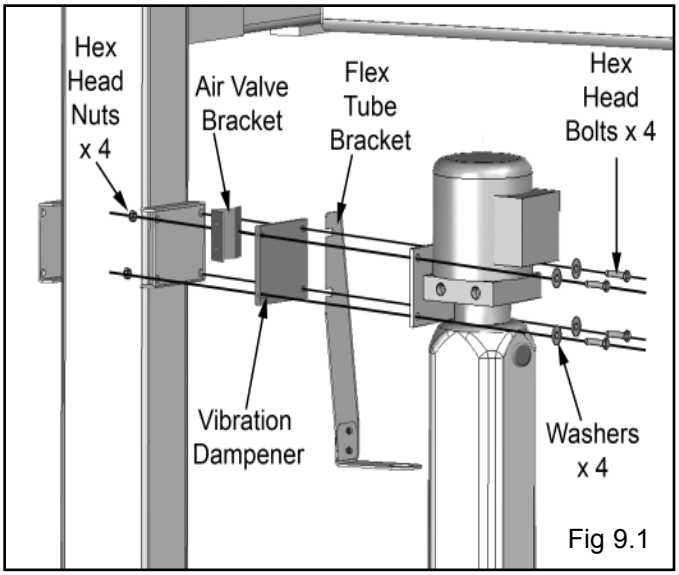

Fig 9.1

2. Fill the reservoir with 12 quarts of 10-WT hydraulic oil or Dexron III automatic transmission fluid.

DANGER !
ALL WIRING MUST BE PERFORMED BY A LICENSED ELECTRICIAN.

DANGER!

DO NOT PERFORM ANY MAINTENANCE OR INSTALLATION OF ANY COMPONENTS WITH OUT FIRST ENSURING THAT ELECTRICAL POWER HAS BEEN DISCONNECTED AT THE SOURCE OR PANEL AND CANNOT BE RE-ENERGIZED UNTIL ALL MAINTENANCE AND/OR INSTALLATION PROCEDURES ARE COMPLETED.

The standard power unit for your lift is 220 volt, 60HZ, single phase. All wiring must be performed by a certified electrician only. SEE WIRING INSTRUCTIONS AFFIXED TO MOTOR FOR PROPER WIRING INSTRUCTIONS.

⚠ WARNING

DO NOT run power unit with no oil. Damage to pump can occur.
The power unit must be kept dry. Damage to power unit caused by water or other liquids such as detergents, acid etc., is not covered under warranty.
Operate lift only between temperatures of 41 °- 104° F.

Improper electrical hook-up can damage motor and will not be covered under warranty.
Motor can not run on 50HZ without a physical change in motor.
Use a separate breaker for each power unit.
Protect each circuit with time delay fuse or circuit breaker.
For 208-230 volt, single phase, use a 25 amp fuse.
For 208-230 volt, three phase, use a 20 amp fuse.
For 380-440 volt, three phase, use a 15 amp fuse.

STEP 10

(Routing Hydraulic Hoses)

1. Install the 90-degree hydraulic fitting to the POWER PORT and the 90* Air Fitting to the RETURN PORT of the Power unit and connect the Hydraulic Hoses as described below. It will be necessary to remove the shipping plugs from both ports prior to installing the Fittings. (See Fig. 10.1 - 10.2)

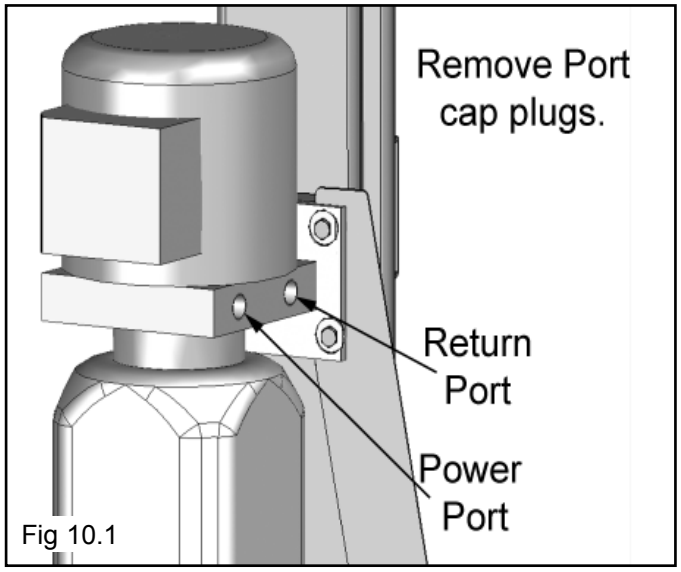

Fig 10.1

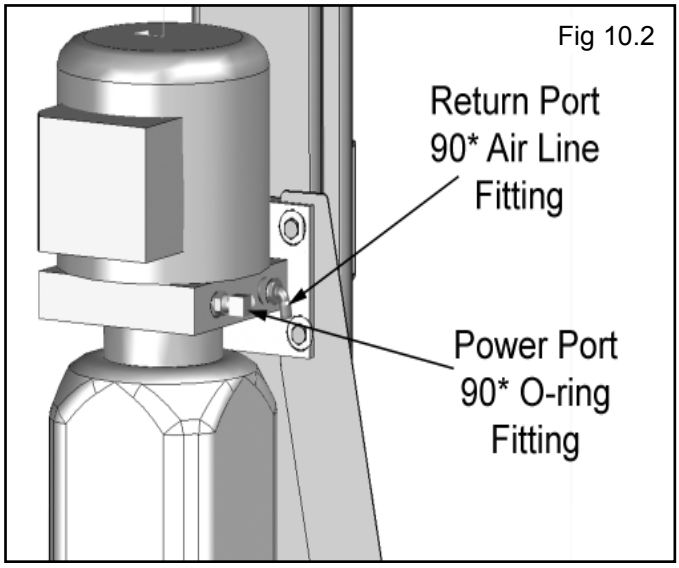

Fig 10.2

NOTE:
Check the Power Unit to determine proper connection ports for Power and Return lines. It will be necessary to remove shipping plugs from both ports prior to installing Fittings.

2. Install the 90-degree Hydraulic Fittings in the port at the ram end of the cylinder. On the pipe thread side of the Fitting it is recommended to use Teflon tape or pipe sealer. DO NOT USE TEFLON TAPE on the JIC flared end. (See Fig. 10.3)

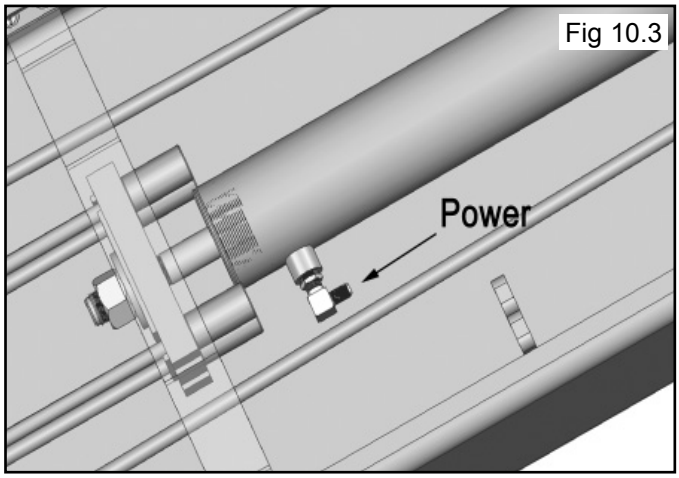

3. Install the 90-degree Air Fitting fitting in the port at the base end of the Cylinder. On the pipe thread side of the Fitting it is recommended to use Teflon tape or pipe sealer. (See Fig. 10.4)

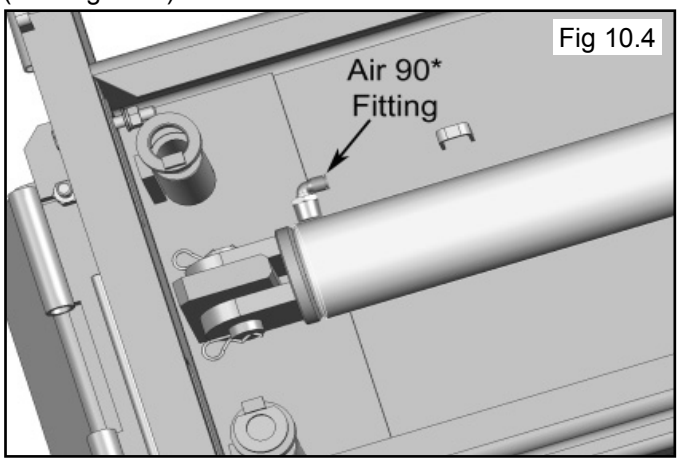

4. Install one end of Flex Hose to into hole in the POWERSIDE RUNWAY adjacent to the Power Unit. Install the other end of the Flex Hose to the Flex Hose Bracket Assy. Tighten securely. (See Fig. 10.5)

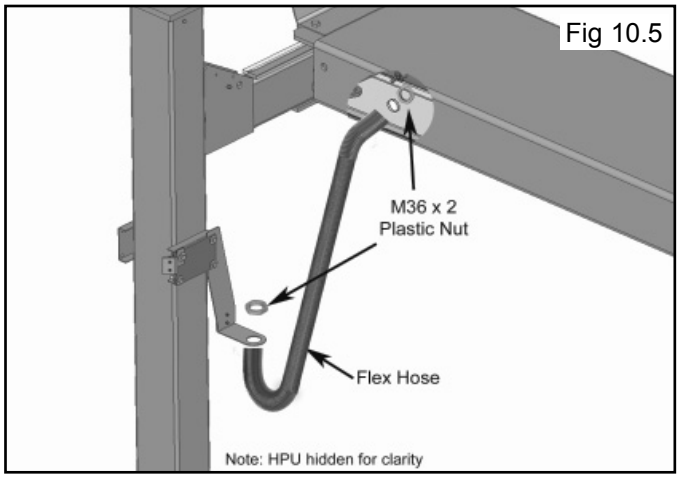

5. Connect Hoses as shown below making sure to pass through the retaining rings. MAKE SURE HOSES ARE KEPT CLEAR OF CABLES. (See Fig. 10.6)

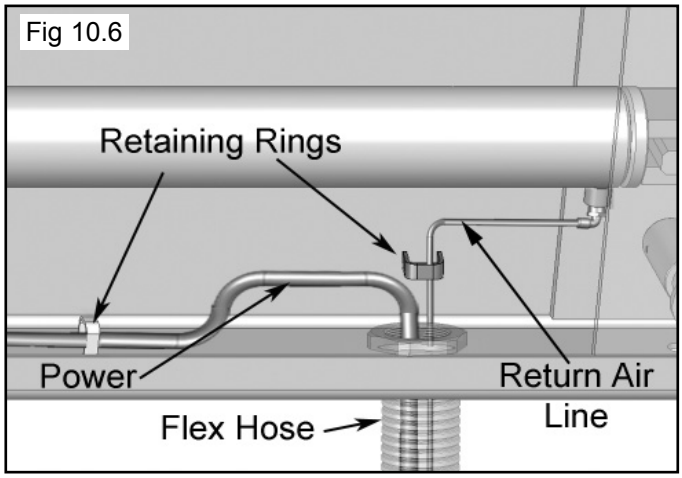

6. Run the Power Unit Hydraulic Hose (90˚ fitting end towards HPU) and the Return Hydraulic Air line through the Flex Hose to the Power Unit. (See Fig. 10.7)

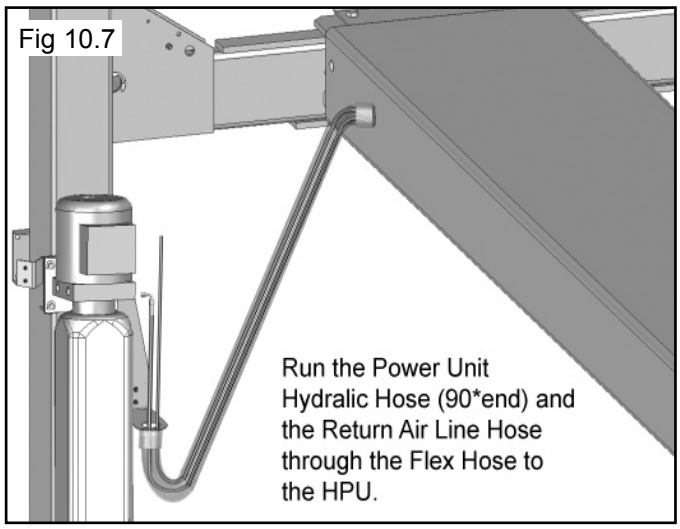

7. Connect the Power Unit Hydraulic Line (90˚ End) to the 90˚ Power Unit Fitting. Connect the Return Air Line to the 90˚ Air Fitting. (See Fig. 10.8)

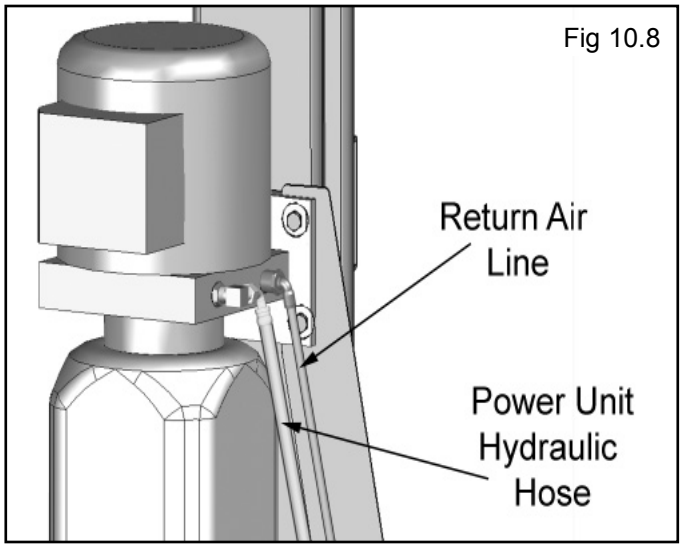

STEP 11

(Routing Air Lines)

Route the air line as shown below making sure to position the push button air valve with the INLET facing towards the AIR SOURCE and the OUTLET facing the direction of the LIFT.
A filter/regulator/lubricator must be installed on air supply at lift. Failure to do so will void the warranty. Cut the provided 1/4" air line tubing with a sharp blade to lengths as required. Tubing must be cut square with no burrs.
Note: To assemble air line tubing into fitting, use firm, manual pressure to push tubing into the fitting until it bottoms out. To remove air line tubing from the fitting, hold push sleeve in (against fitting) and, at the same time, pull out on tubing. Pay careful attention to keep air line clear of any pinch points. Improper assembly may result in safety lock failure.
AIR PRESSURE SHOULD BE REGULATED TO 125 PSI MAX. (See Fig. 11.1)

Fig 11.1

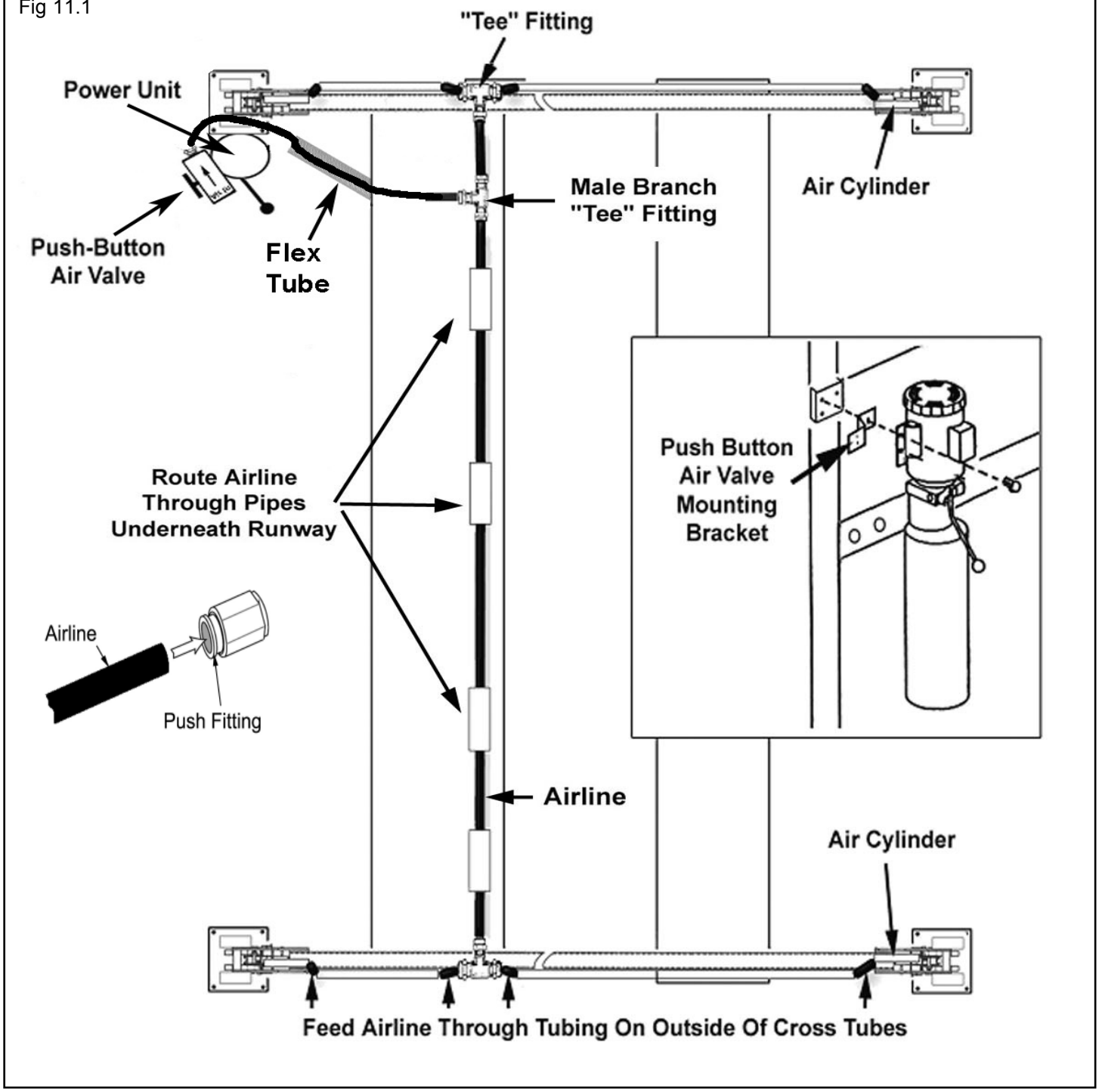

⚠ DANGER

DANGER!

DO NOT PERFORM ANY MAINTENANCE OR INSTALLATION OF ANY COMPONENTS WITH OUT FIRST ENSURING THAT ELECTRICAL POWER HAS BEEN DISCONNECTED AT THE SOURCE OR PANEL AND CANNOT BE RE-ENERGIZED UNTIL ALL MAINTENANCE AND/OR INSTALLATION PROCEDURES ARE COMPLETED.

IMPORTANT POWER-UNIT INSTALLATION NOTES

- DO NOT run power unit with no oil. Damage to pump can occur.
- The power unit must be kept dry. Damage to power unit caused by water or other liquids such as detergents, acid etc., is not covered under warranty.
- Improper electrical hook-up can damage motor and will not be covered under warranty.
- Motor can not run on 50HZ without a physical change in motor.
- Use a separate breaker for each power unit.
- Protect each circuit with time delay fuse or circuit breaker.
- For 208-230 volt, single phase, use a 25 amp fuse.
- For 208-230 volt, three phase, use a 20 amp fuse.
- For 380-440 volt, three phase, use a 15 amp fuse.

Installation and adjustment. DO NOT attempt to raise vehicle until a thorough operation check has been completed.

All wiring must be performed by a certified electrician only.

Single Phase

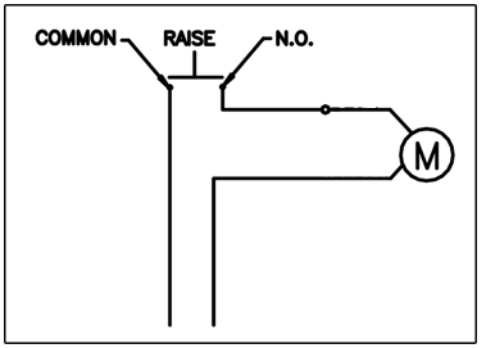

Three Phase

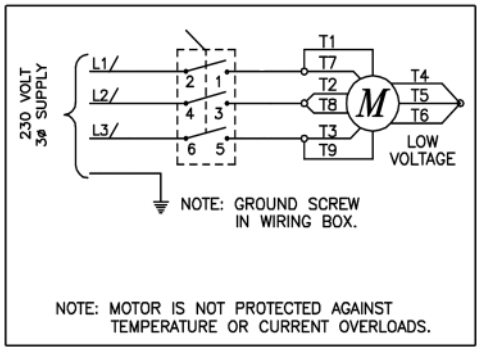

SEE WIRING INSTRUCTIONS AFFIXED TO MOTOR FOR PROPER WIRING INSTRUCTIONS.

Important Safety Label Placement Guidelines

Equipment: Four Post Lifts

Revised 06-05-08

⚠WARNING

THESE ANSI/ALI ALCTV-2006 MANDATED SAFETY LABELS ARE PROVIDED FOR THIS PRODUCT FOR THE PROTECTION OF THE OPERATOR AND ANY PERSON(S) working near the lift. The safety stickers must be installed as per the instructions below prior to the completion of installation. Failure to properly install warning labels could fail to warn and lead to serious personal injury or death to operator or bystander or damage to property. Be sure everyone who operates this equipment understands all the information, caution, warning and danger labels. Keep the labels clean so they are legible. This applies to all caution, warning and danger labels. It is the OWNER'S RESPONSIBILITY to provide information to all operators for safe operation of this lift. Replace any damaged or worn labels. Once any part of a label becomes illegible, it should be replaced. The part numbers for the labels are located in the lower right corner of the label. Replacement labels may be ordered through your dealer or the address below. When installing and/or replacing labels, be sure the surface is clean and dry, peel the backing off the label, and apply to the reservoir as shown below. Be sure to wipe with a clean cloth to rub out all air bubbles

Config. A
Long Narrow Reservoir

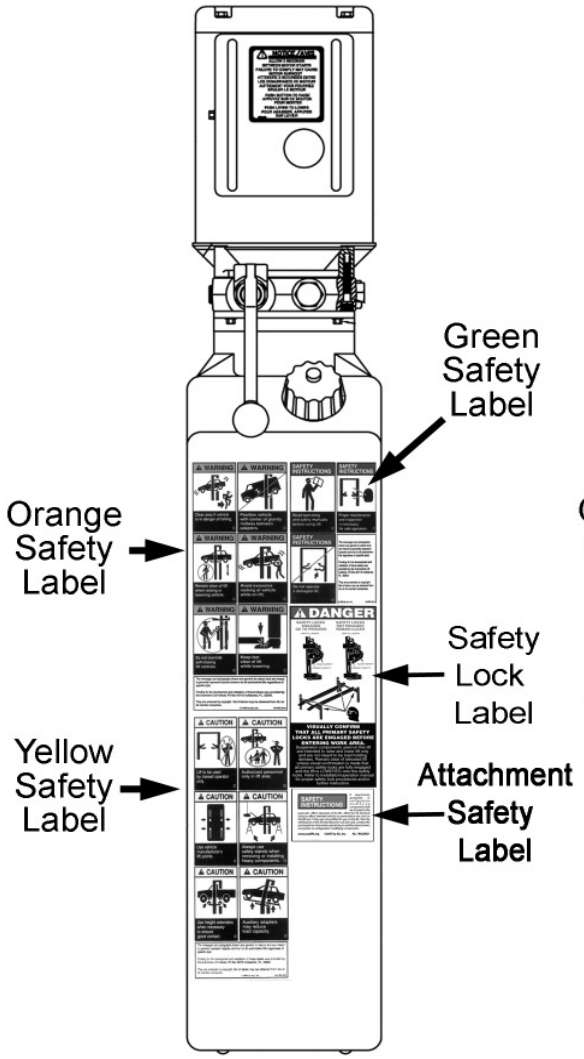

Config. B
Shorter Wide Reservoir

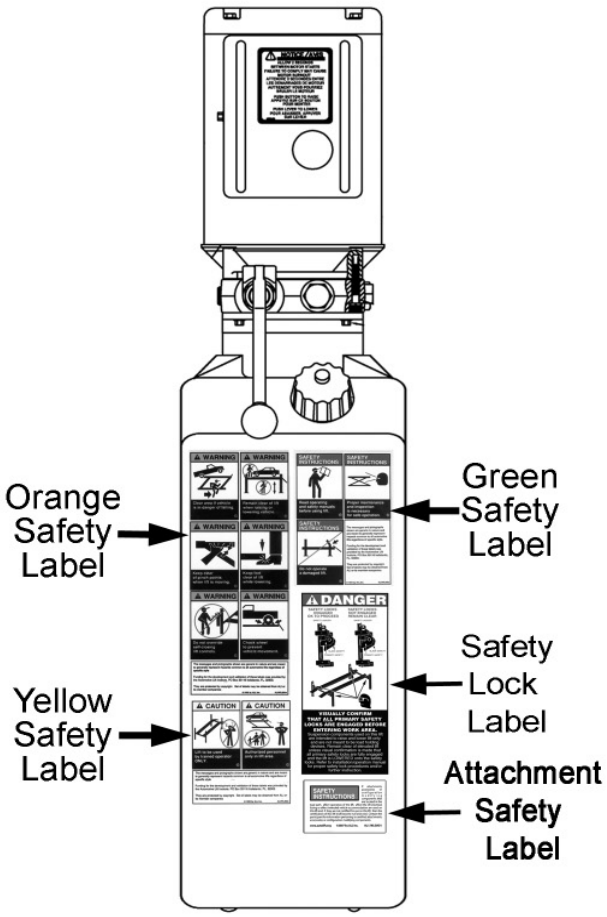

BendPak
PROVIDING AUTOMOTIVE SERVICE SOLUTIONS

BendPak / Ranger
1645 Lemonwood Dr.
Santa Paula, CA 93060
Tel: 1-805-933-9970 / www.bendpak.com

STEP 12

(Power Unit Hook Up)

1. Have a certified electrician run the power supply to motor. Refer to the data plate found on the motor for proper power supply and wire size.

⚠ DANGER

RISK OF EXPLOSION!

This equipment has internal arcing or parts that may sparkand should not be exposed to flammable vapors. Motor should not be located in a recessed area or below floor level. NEVER expose motor to rain or other damp environments. DAMAGE TO MOTOR CAUSED BY WATER IS NOT COVERED UNDER WARRANTY.

IMPORTANT NOTE:

CAUTION Never operate the motor on line voltage less than 208V. Motor damage may occur which is not covered under warranty. Have a certified electrician run appropriate power supply to motor. Size wire for 25amp circuit. See Motor Operating Data Table.
IMPORTANT: Use separate circuit for each Power Unit Protect each circuit with time delay fuse or circuit breaker. For single phase 208-230V, use 25 amp fuse. Three phase 208-240V, use 25 amp fuse. For three phase 400V and above, use 15 amp fuse. All wiring must comply with NEC and all local electrical codes.

Fig. 12.1

POWER UNIT

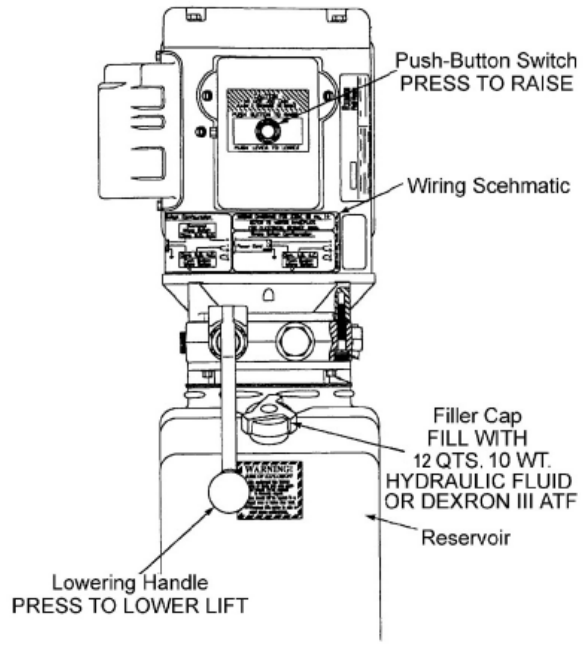

STEP 13

(Inspecting The Slack Safety Springs)

⚠ DANGER

The following steps involve the SLACK CABLE SAFETY DEVICE and MAIN SAFETY. Failure to follow these steps could result in serious injury or death in the event of cable failure.

1. Inspect the ends of the SLACK SAFETY LOCK SPRINGS as shown. Make sure the spring ends are secure at both ends. **DO NOT ATTEMPT TO RAISE THE LIFT UNTIL THE SLACK SAFETY SPRINGS ARE ATTACHED AND THE ROLLERS ARE PULLED CLEAR FROM THE LADDER.** (See Fig. 13.1)

Fig 13.1

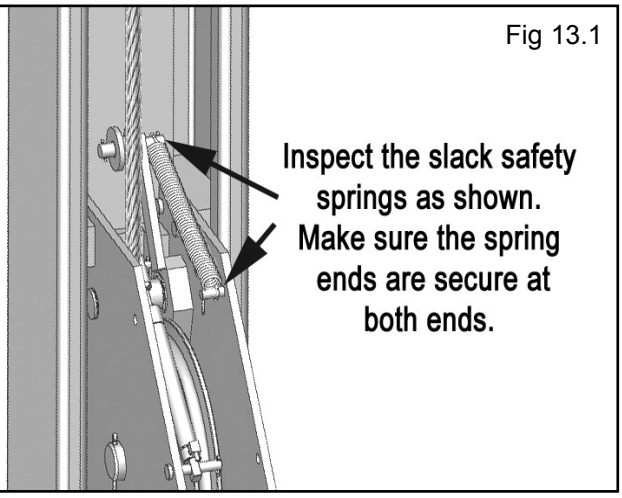

STEP 14

(Lift Start Up / Final Adjustments)

1. Make sure the power unit reservoir is full with 12 quarts of 10-WT hydraulic oil or Dexron-III automatic transmission fluid.

2. Spray the inside of the Columns where the Slide Blocks glide with a light lubricant or WD-40.

3. Test the Power Unit by pressing the push-button switch. If the motor sounds like it is operating properly, raise the lift and check all hose connections for leaks. If the motor gets hot or sounds peculiar, stop and check all electrical connections.

4. Before proceeding, double-check to make sure all Cables are properly positioned within the grooves of ALL sheaves. Make sure all Cable Sheave Retaining Pins and/or clips are secure.

5. Check to make sure that all Slack Safety Locks are cleared and free. (See Fig. 14.1)

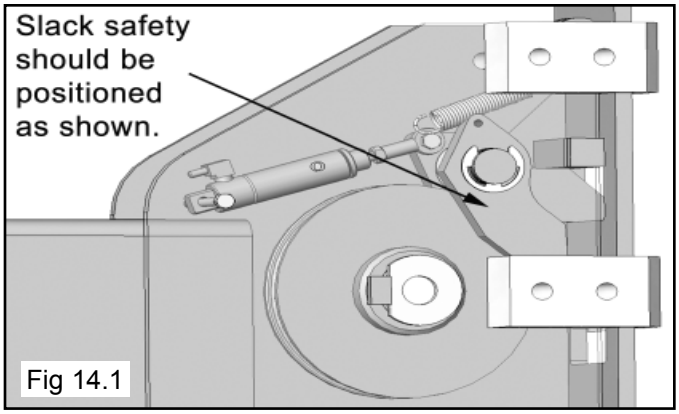

Fig 14.1

6. Continue pressing the raise button until the Cables get taught and the lift starts to move.

7. RAISE LIFT UNTIL THE CYLINDER BOTTOMS OUT AND THE LIFT STOPS. ADJUST EACH CABLE SO THAT EACH SAFETY LOCK RESTS AT ONE INCH ABOVE THE TOP SAFETY LOCK POSITION. It may be necessary to tighten or loosen each Cable to reach the proper height. The Cable Nuts MUST be tightened until there is at least one inch of threads protruding through the nut. (See Fig. 14.2)

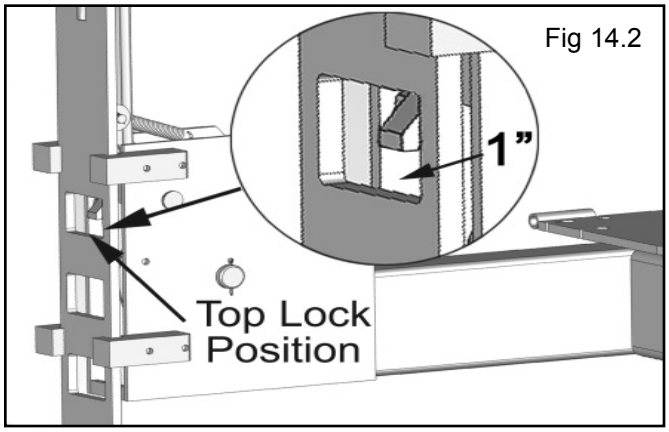

Fig 14.2

⚠ WARNING

All Cable Nuts MUST be tightened on each end until there is at least one inch of threads protruding through the nut. Failure to do so could result in serious injury or death.

NOTE:

There will be initial stretching of the cables in the beginning and/or with increased loads. Adjust the Cables as outlined above a week after first use, then every three to six months thereafter depending on usage and/or to compensate for stretch.

8. After connecting the air supply, press the PUSH BUTTON AIR VALVE and check that all safety locks are functioning properly. Lower the lift by pressing the push button air valve and power unit lowering valve simultaneously.

⚠ WARNING

KEEP HANDS AND FEET CLEAR. Remove hands and feet from any moving parts. Keep feet clear of lift when lowering. Avoid pinch points.

9. Check all MAIN SAFETY LOCKS to make sure they move freely and spring back to the lock position when released. Lubricate all SAFETY PIVOT points with WD-40 or equal.

10. Run the lift up and down a few times to insure that the locks are engaging uniformly and that the safety release mechanisms are functioning. Re-adjust if necessary.

STEP 15

(Anchoring The Columns)

1. Before proceeding, double check the measurements and make certain that the bases of each Column are square and aligned with the chalk line. Raise the lift up and down and make sure it operates properly at the locations prescribed by the markings on the floor. (See Fig. 15.1)

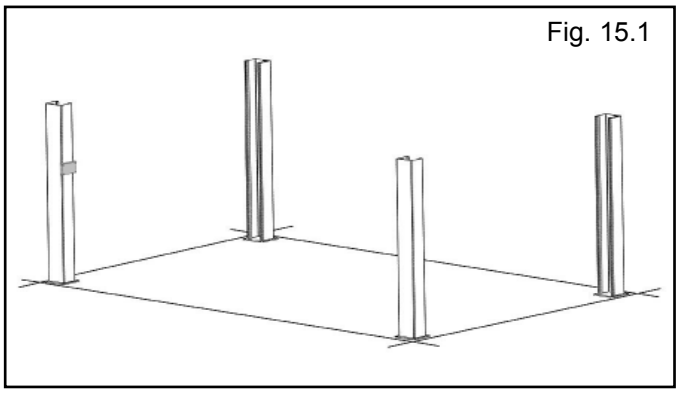
Fig. 15.1

2. Using the base plate on each Column as a guide, drill each anchor hole approximately 4-1/2” deep using a rotary hammer drill and 3/4” concrete bit. (See Fig. 15.2)

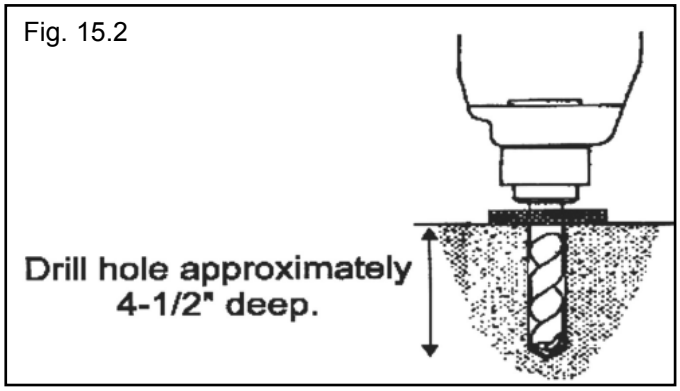

Fig. 15.2

3. After drilling, remove dust thoroughly from each hole using compressed air and/or bristle brush. Make certain that the Columns remain aligned with the chalk line.

⚠ CAUTION

ALWAYS WEAR SAFETY GOGGLES.

4. Assemble the Washers and Nuts on the Anchors then tap each hole with a hammer until the washer rests against Base Plate. Be sure that if shimming is required, enough threads are left exposed. (See Fig. 15.3)

Fig 15.3

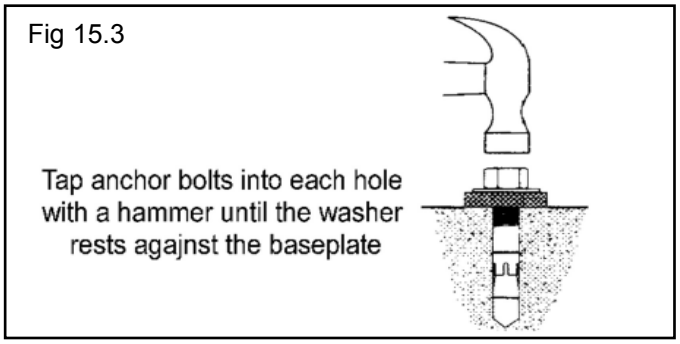

5. If shimming is required, insert the shims as necessary the base plate so that when the Anchor Bolts are tightened, the Columns will be plumb. (See Fig. 15.4)

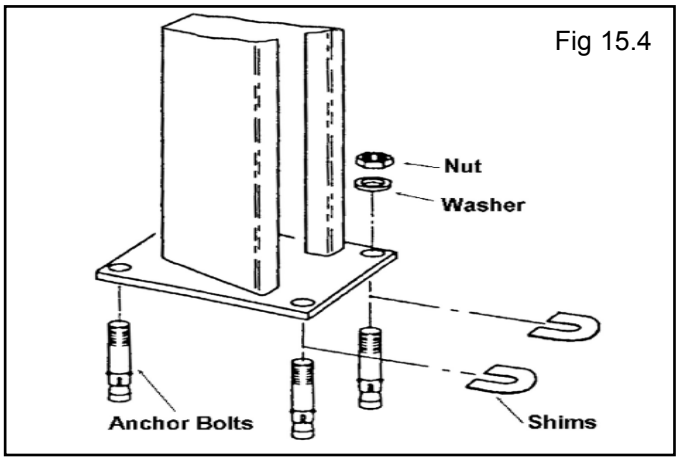

Fig 15.4

6. After any necessary shims are installed, tighten each nut to 35-45 ft./lbs. IMPORTANT - If Anchor Bolts do hold when torqued to required amount, concrete must replaced. Saw cut and remove 24" x 24" square area each Column base then re-pour with reinforced 2500 concrete to a depth of six inches minimum, keying new concrete under existing floor. (See Fig. 15.5)

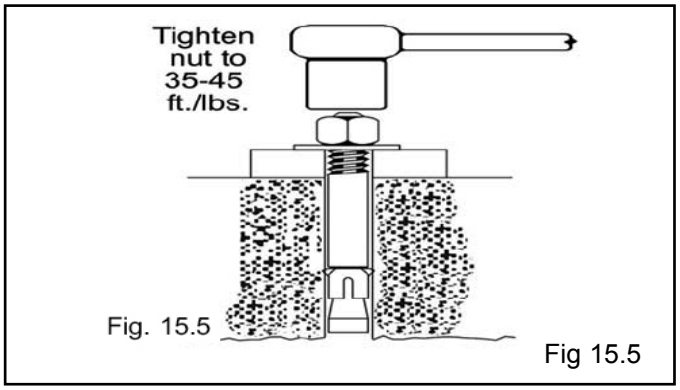

Fig 15.5

STEP 16

(Attaching the Approach Ramp /Tire Stops)

1. Install the Approach Ramps on the entry side of the lift. Use the Top Pin Tube for HD-14-SS-X (See Fig. 16.1)

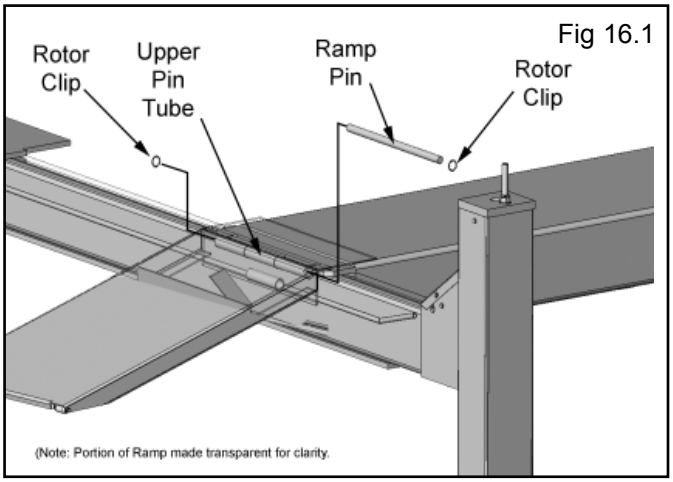

Fig 16.1

2. Install the Front Tire Stops at the forward side of the lift using the M14 x 2 hex bolts, nuts and washers. (See Fig. 16.2)

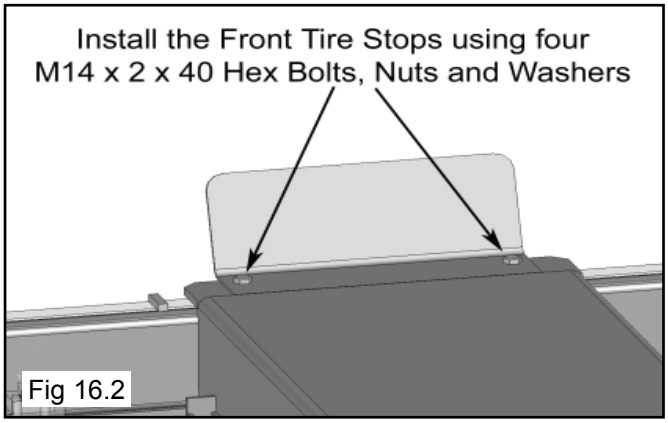

Fig 16.2

⚠ WARNING

WARNING!
Wheels Chock must be used on the rear wheels. (See Fig 16.3)

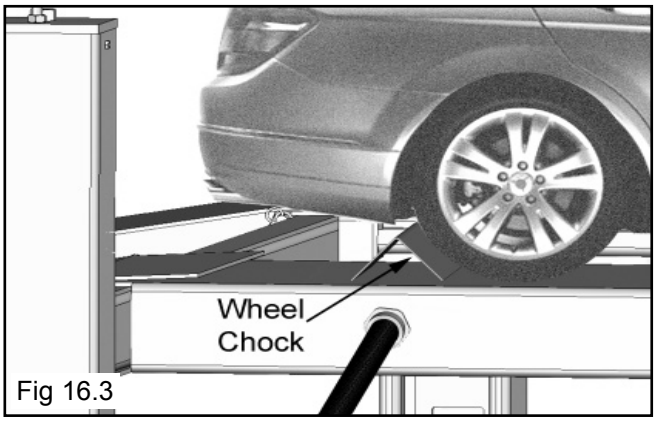

Fig 16.3

STEP 17

(Leveling / Synchronizing)

1. Using an engineer's automatic Level (transit), locate the Level, at a convenient location in the shop that allows an unobstructed view of all four corners of the Runways.

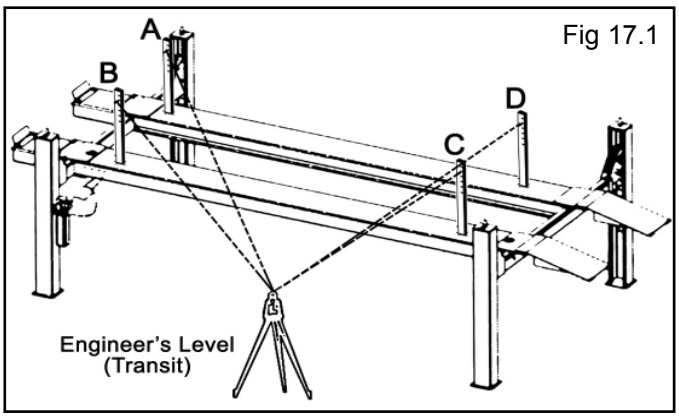

Fig 17.1

2. Follow the Level manufacturer's instructions for proper setup of the Level. Be sure it is adjusted level in all -directions.

3. Raise the lift approximately 30"- 40". Then lower the lift until all Primary Safeties are engaged in each Column and the Runways are completely resting on the Primary Safeties.

4.Place a Level target on the right/front corner of the Runway. (See Fig. 17.1)

5. Beginning with "A" position, sight the level to the target and mark the number or the graduation on the inch scale of the target that aligns to the cross hairs of the Level. (See Fig. 17.1)

Note:

Use a pencil, marking pen or attach a paper clip onto the target scale at the cross hair reference.

6. Next, move the target and place it at point "B" on the runway. (See Fig. 17.1)

7. Rotate the Level and focus on the target scale.

8. Adjust the adjustment nut on the safety ladder bar at the top of the Column at "B" until the cross hairs of the Level align to reference mark on the target scale. (See Fig. 17.1)

9. Repeat steps locating the target assembly at points "C" and "D" and adjusting safety ladders at each corresponding Column until the reference mark on the target scale is on the cross hairs of the Level. The Runways are now level at all four points. (See Fig. 17.1)

10. To complete the leveling procedures, lock each safety ladder jam nut tightly against bottom of column top plate. (See Fig. 17.2)

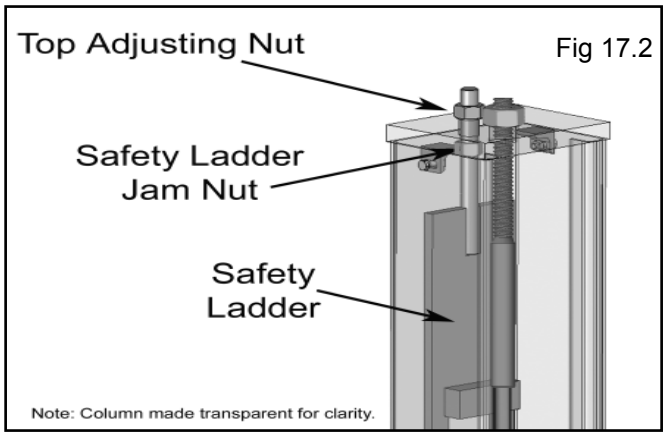

Fig 17.2

11. Next, load vehicle onto the lift.

12. Raise the lift to full height. Listen and watch as the Primary Safeties engage the safety ladder. Synchronize by adjusting the Cables so that all four latches click at same time. Make necessary adjustments to the Cables allowing compensation for stretch.

⚠ WARNING

Safety Locks may not engage at exactly the same time when vehicles are being raised. They should be close. Be sure that all four corners have passed the SAME Safety Ladder bar slot before lowering lift on the safety locks. NEVER lower lift on different Safety Lock position or damage to the lift may result.

13. Install the four Cross Tube Covers. (See Fig 17.3)

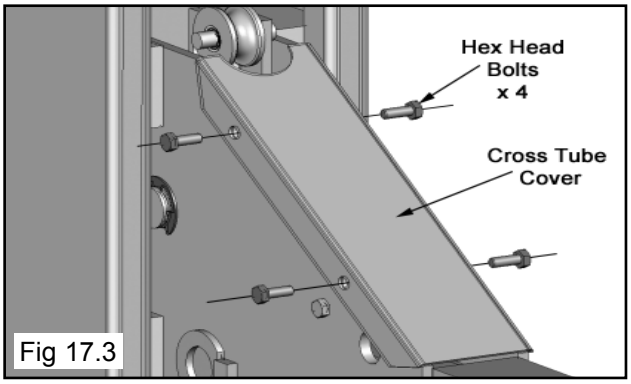

Fig 17.3

STEP 18
(Bleeding)

1. Lift must be fully lowered before changing or adding fluid.

2. Raise and lower lift six times. The Cylinder is self-bleeding. After bleeding system, fluid level in power unit reservoir may be down. Add more fluid if necessary to raise lift to full height. It is only necessary to add fluid to Raise lift to full height.

3. To pressure test, run lift to full rise and run motor for approximately 3-seconds after lift stops. This will place pressure on the hydraulic system. Stop and check all fittings and hose connections. Tighten or reseal if required.

POST-INSTALLATION CHECK-OFF

Columns Properly Shimmed And Stable

Anchor Bolts Tightened

Pivot / Sheave Pins Properly Attached

Electric Power Supply Confirmed

Cables Adjusted Properly

Safety Locks Functioning Properly

Check For Hydraulic Leaks

Oil Level

Lubrication of Critical Components

Check For Overhead Obstructions

Runways Level

All Screws, Bolts, and Pins Secured

Surrounding Area Clean

Operation, Maintenance and Safety Manuals on Site

⚠ WARNING

WARNING!
Wheels Chock must be used on the rear wheels. (See Fig 18.3)

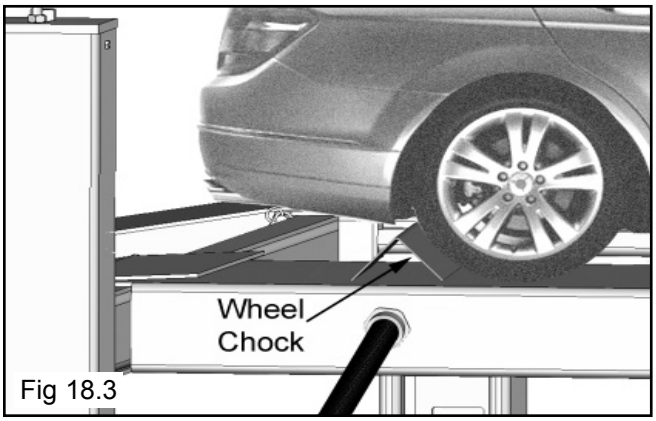

Fig 18.3

HD-9-12,12X,14,14X Series Rolling Jack
Air Line Installation Kit Part # 5174009

REV 06-04-09

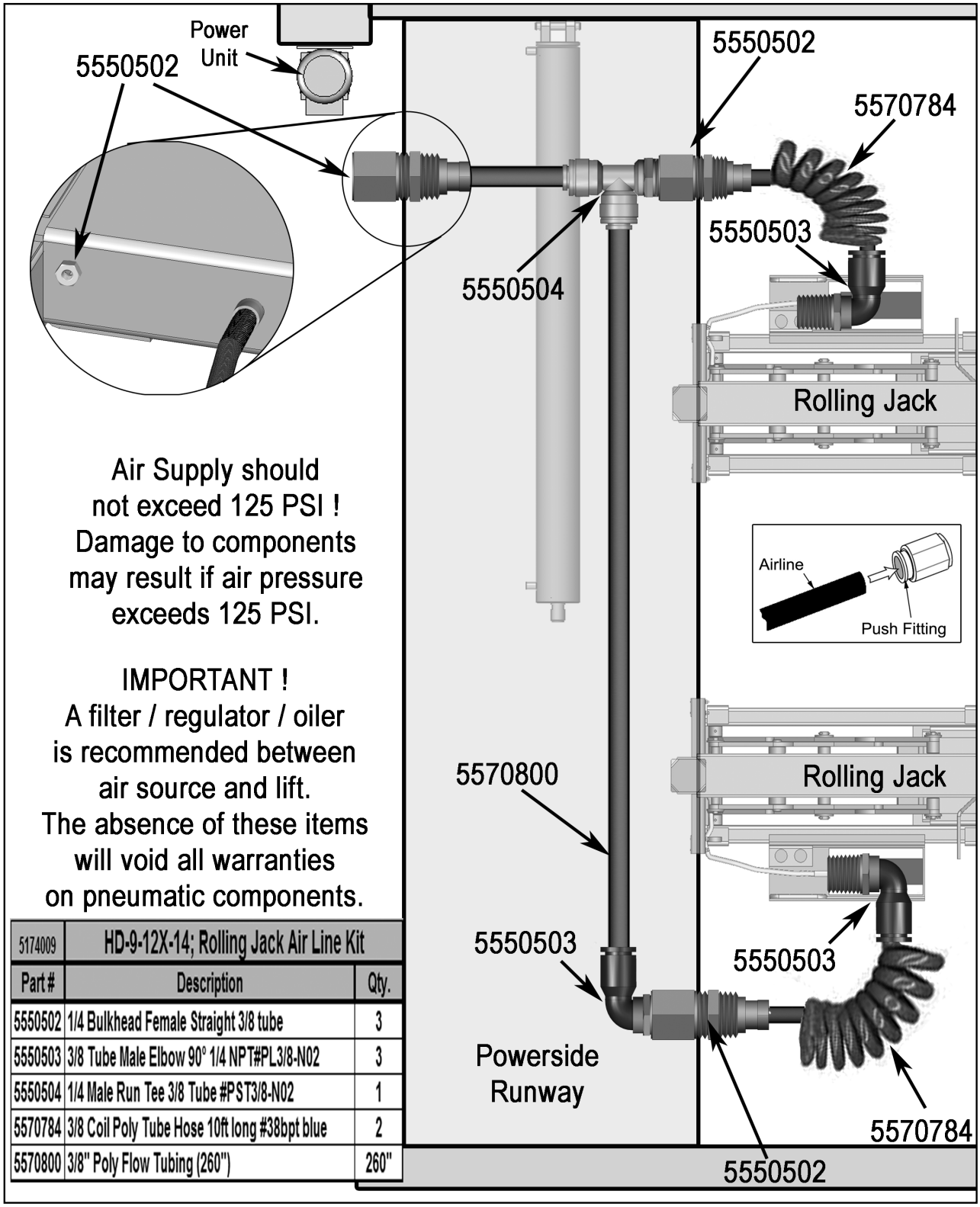

Air Supply should not exceed 125 PSI ! Damage to components may result if air pressure exceeds 125 PSI.

IMPORTANT ! A filter / regulator / oiler is recommended between air source and lift. The absence of these items will void all warranties on pneumatic components.

5174009	HD-9-12X-14; Rolling Jack Air Line Kit	
Part #	Description	Qty.
5550502	1/4 Bulkhead Female Straight 3/8 tube	3
5550503	3/8 Tube Male Elbow 90° 1/4 NPT#PL3/8-N02	3
5550504	1/4 Male Run Tee 3/8 Tube #PST3/8-N02	1
5570784	3/8 Coil Poly Tube Hose 10ft long #38bpt blue	2
5570800	3/8" Poly Flow Tubing (260")	260"

Utility Air-Electric Workstation

Utility Station may be mounted on the vertical column of the lift or on a wall.
IMPORTANT: Check State or Local codes for any height requirements for the electrical outlets before mounting.
Adapter Plate Required for HD-9,12,14
To mount the Utility Station on a Lift Column, use the Box as a template, mark and drill 11/32" diameter holes. Use 5/16" diameter bolts and lock nuts to secure to the side of the lift.

IMPORTANT: The hole locations are critical to avoid interference with the carriage slide blocks.

For Wall mounting , mount in the same fashion, use appropriate hardware for either sheet rock or concrete.

IMPORTANT: All electrical wiring shall comply with all State and Local Codes.

Connect electrical wiring to single phase, 60Hz 115 volt electrical supply using suitable conduit (not supplied). The duplex receptacle must be connected through the GFCI with the input line to the box connected to a circuit breaker or time delay fuse rated at 20 amps. Both receptacles must be grounded to the box.

Connect main air supply to 1/4" ball valve inlet on the Utility Station (Run 1/2" line from compressor or main air system to Utility Station.)

Install Quick Couplers to the 1/4" male fittings on the box. The air supply between the filter and the lubricator will be non-lubricated, used for tire inflation or blowing off. The air outlet on the left side will be lubricated for air tool use.

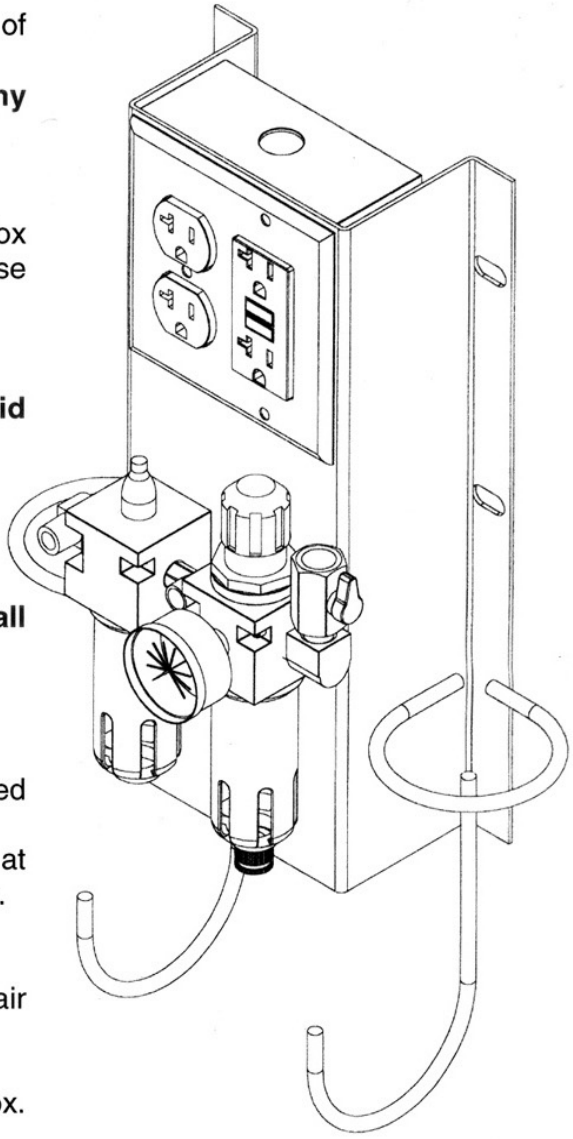

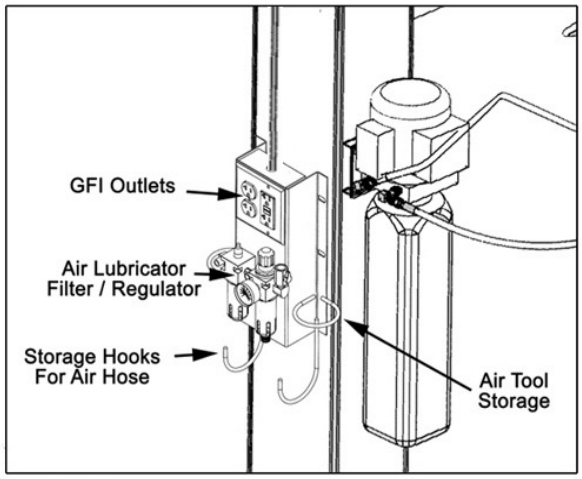

Regulator Instructions

- Regulate pressure by raising the knob, then turning clockwise to increase and counterclockwise to decrease. Push knob down to lock setting.
- Adjust the oil mist using the screwdriver slot located on top of the lubricator.
- To fill the lubricator, first depressurize the air system, remove the slotted screw plug in the body. Replace the screw before repressurizing.

Adapter Plate Required for HD-9,12,14

STEP 19

(Operation)

To Raise Lift;

1. Position vehicle tires in the center of each Runway.

2. Set parking brake and use Wheel Chocks to hold vehicle in position.

3. Before raising vehicle, be sure all personnel are clear of the lift and surrounding area. Pay careful attention to overhead clearances.

4. Raise the lift to the desired height by pressing the push button on the power unit.

⚠ DANGER

VISUALLY CONFIRM THAT ALL PRIMARY SAFETY LOCKS ARE ENGAGED BEFORE ENTERING WORK AREA.
Suspension components us on this lift are intended to raise and lower lift only and are not meant to be load holding devices. Remain clear of elevated lift unless visual confirmation is made that all Primary Safety Locks are fully engaged and the lift is LOWERED onto the Safety Locks, Refer to installation /operation manual for proper safety lock procedures and /or further instruction.

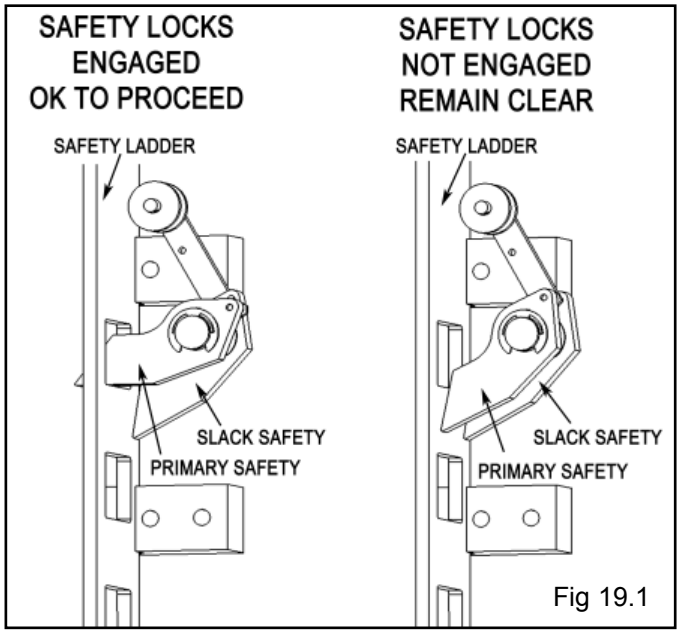

Fig 19.1

5. After vehicle is raised to the desired height, lower the lift onto the nearest Safety Lock. Do not allow Cables to become slack. ALWAYS INSURE ALL SAFETY LOCKS ARE ENGAGED before entering work area.

To Lower Lift;

1. Before lowering vehicle, be sure all personnel are clear of the lift and surrounding area. Pay careful attention to overhead clearances. Insure all tools and equipment have been cleared from under the lift.
2. Raise the lift off of the Safety Locks by pressing the push button on the Power Unit. Make sure you raise the lift by at least two inches to allow adequate clearance for the locks to clear.
3. Press the push button air safety valve and HOLD.
4. Push the LOWERING HANDLE on the Power Unit until the lift has descended completely.

When lowering the lift PAY CAREFUL ATTENTION that all personnel and objects are kept clear. ALWAYS keep a visual line of site on the lift AT ALL TIMES. ALWAYS make sure that all FOUR LOCKS are disengaged. If one of the locks inadvertently locks on descent the lift and/or vehicle may disrupt causing personal injury or death.

WEEKLY MAINTENANCE

1. Lubricate all rollers with general purpose oil or WD-40.
2. Check all Cable connections, bolts and pins to insure proper mounting.
3. Lubricate Safety Lock pivot points with general purpose oil or WD-40.

MONTHLY MAINTENANCE

1. Check Safety Locks to insure they are in good operating condition.
2. Check all Cables for excessive signs of wear.
3. Make a visual inspection of ALL MOVING PARTS and check for excessive signs of wear.
4. Replace ALL FAULTY PARTS before lift is put back into operation.

⚠ WARNING

NEVER EXCEED THE RATED CAPACITY of lift.
DO NOT USE LIFT if any component is found to be defective or worn.
NEVER OPERATE LIFT with any person or equipment below.
ALWAYS STAND CLEAR of lift when lowering or raising.
ALWAYS INSURE SAFETY LOCKS ARE ENGAGED before entering work area.
NEVER LEAVE LIFT IN ELEVATED CONDITION unless all four safety locks are engaged.

⚠ WARNING

WIRE ROPE INSPECTION AND MAINTENANCE

♦ Lifting cables should be replaced every three - five years or when visible signs of damage are apparent. DO NOT USE LIFT WITH DEFECTIVE / WORN CABLES.

♦ Lifting cables should be maintained in a well-lubricated condition at all times. Wire rope is only fully protected when each wire strand is lubricated both internal and external. Excessive wear will shorten the life of the wire rope. The factory suggested wire rope lubricant that penetrates to the core of the rope and provides long-term lubrication between each individual strand is 90-WT gear oil or ALMASOL® Wire Rope Lubricant. In order to make sure that the inner layers of the rope remain well lubricated, lubrication should be carried out at intervals not exceeding three months during operation.

♦ All sheaves and guide rollers in contact with the moving rope should be given regular visual checks for surface wear and lubricated to make sure that they run freely. This operation should be carried out at appropriate intervals generally not exceeding three months during operation. For all sheave axles, the factory recommends standard wheel bearing grease. For all sheaves and/or guide rollers, the factory recommends 90-WT gear oil or similar heavy lubricant applied by any method including pump / spray dispensing, brush, hand and/or swabbing.

.

HOW OFTEN TO INSPECT

♦ Lifting cables should be visually inspected at least once each day when in use, as suggested by American Petroleum Institute (API) RP54 guidelines.

♦ Any lifting cables that have met the criteria for removal must be immediately replaced.

WHEN TO REPLACE LIFTING CABLES DUE TO BROKEN WIRES

♦ Lifting cables should be removed from service when you see six randomly distributed broken wires within any one lay length, or three broken wires in one strand within one lay length.

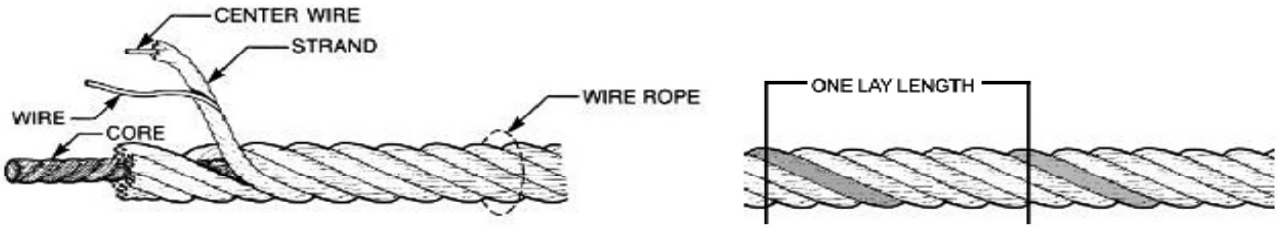

The three basic components of a typical wire rope.

OTHER REASONS TO REPLACE LIFTING CABLES

♦ Corrosion that pits the wires and/or connectors.
♦ Evidence of kinking, crushing, cutting, bird-caging or a popped core.
♦ Wear that exceeds 10% of a wire's original diameter.
♦ Evidence of heat damage.

HOW TO FIND BROKEN WIRES

♦ The first step is to relax your rope to a stationary position and move the pick-up points off the sheaves. Clean the surface of the rope with a cloth — a wire brush, if necessary — so you can see any breaks.

♦ Flex the rope to expose any broken wires hidden in the valleys between the strands.

♦ Visually check for any broken wires. One way to check for crown breaks is to run a cloth along the rope to check for possible snags.

♦ With an awl, probe between wires and strands and lift any wires that appear loose. Evidence of internal broken wires may require a more extensive rope examination.

⚠ WARNING

WIRE ROPE INSPECTION AND MAINTENANCE

- Lifting cables should be replaced every three years or when visible signs of damage are apparent. DO NOT USE LIFT WITH DEFECTIVE / WORN CABLES.
- Wire rope should be maintained in a well-lubricated condition at all times. Wire rope is only fully protected when each wire strand is lubricated both internal and external. Excessive wear will shorten the life of the wire rope. The factory suggested wire rope lubricant that penetrates to the core of the rope and provides long term lubrication between each individual strand is AMSOIL Synthetic Open Gear and Wire Rope Compound or 90-W1 gear oil or similar heavy lubricant. In order to make sure that the inner layers of the rope remain well lubricated, lubrication should be carried out at intervals not exceeding three months during operation.
- All sheaves and guide rollers in contact with the moving rope should be given regular visual checks for surface wear and lubricated to make sure that they run freely. This operation should be carried out at appropriate intervals generally not exceeding three months during operation. For all sheave axles, the factory recommends standard wheel bearing grease. For all sheaves and/or guide rollers, the factory recommends 90-W1 gear oil or similar heavy lubricant applied by any method including pump / spray dispensing, brush, hand and/or swabbing.

Failure to read, understand, and follow these instructions may cause death or serious injury. Read and understand these instructions before using lift.

⚠ DANGER

THE MAXIMUM LIFTING CAPACITY FOR THIS LIFT IS DESCRIBED BELOW

Maximum Lifting Capacity 14,000 Lbs / 6,350 Kg.
Maximum Lifting Capacity Two Axle Vehicle / Front Axle 7,000 Lbs / 3,175 Kg.
Maximum Lifting Capacity Two Axle Vehicle / Rear Axle 7,000 Lbs / 3,175 Kg.

Exceeding the weight capacity of this lift can damage lift and/or property and may cause personal harm, injury or death to operators and/or bystanders. All vehicles MUST be positioned on lift with CENTER OF GRAVITY midway between adapters and/or centered on runways. Damage to lift due to overloading or misuse IS NOT covered under warranty.

The messages and pictographs shown are generic in nature and are meant to generally represent hazards common to all automotive lifts regardless of specific style

Funding for the development and validation of these labels was provided by the Automotive Lift Institute, PO Box 33116 Indialantic, FL. 32903.

They are protected by copyright. Set of labels may be obtained from ALI or its member companies

© 1992 by ALI, Inc. ALI/WL200w

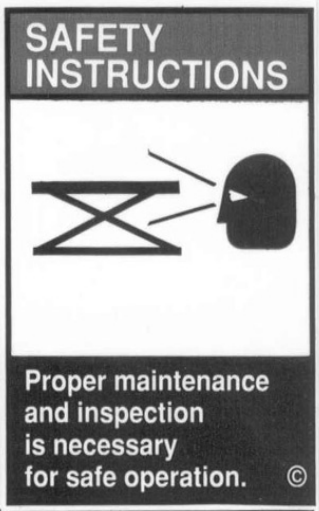

The messages and pictographs shown are generic in nature and are meant to generally represent hazards common to all automotive lifts regardless of specific style.

Funding for the development and validation of these labels was provided by the Automotive Lift Institute, PO Box 33116 Indialantic, FL. 32903.

They are protected by copyright. Set of labels may be obtained from ALI or its member companies.

© 1992 by ALI, Inc. ALI/WL200s

The messages and pictographs shown are generic in nature and are meant to generally represent hazards common to all automotive lifts regardless of specific style.

Funding for the development and validation of these labels was provided by the Automotive Lift Institute, PO Box 33116 Indialantic, FL. 32903.

They are protected by copyright. Set of labels may be obtained from ALI or its member companies.

© 1992 by ALI, Inc. ALI/WL200c

Safe Lift Operation

Automotive and truck lifts are critical to the operation and profitability of your business. The safe use of this and other lifts in your shop is critical in preventing employee injuries and damage to customer's vehicles. By operating lifts safely you can insure that your shop is profitable, productive and safe.
Safe operation of automotive lifts requires that only trained employees should be allowed to use the lift.

TRAINING SHOULD INCLUDE, BUT NOT LIMITED TO:

- Proper positioning of the vehicle on the runway. (See manufacturers minimize wheel base loading requirements.)
- Use of the operating controls.
- Understanding the lift capacity.
- Proper use of jack stands or other load supporting devices.
- Proper use, understanding and visual identification of safety lock devices and their operation.
- Reviewing the safety rules.
- Proper housekeeping procedures (lift area should be free of grease, oil, tools, equipment, trash, and other debris)
- A daily inspection of the lift should be completed prior to its use. Safety devices, operating controls, lift arms and other critical parts should be inspected prior to using the lift.
- All maintenance and repairs of the lift should be completed by following the manufacturer's requirements. Lift repair parts should meet or exceed OEM specifications. Repairs should only be completed by a qualified lift technician.
- The vehicle manufacturer's recommendations should be used for spotting and lifting the vehicle.

LIFT OPERATION SAFETY

- It is important that you know the load limit. Be careful that you do not overload the lift . If you are unsure what the load limit is, check the data plate found on one of the lift columns or contact the manufacturer.
- The center of gravity should be followed closely to what the manufacturer recommends.
- Always make sure you have proper overhead clearance. Additionally, check that attachments, (vehicle signs, campers, antennas, etc.) are not in the way.
- Be sure that prior to the vehicle being raised, the doors, trunk, and hood are closed securely
- Prior to being raised, make sure there is no one standing closer than six feet from the lift
- After positioning the vehicle on the lift runways, set the emergency brake, make sure the ignition is off, the doors are closed, overhead obstructions are cleared, and the transmission is in neutral.
- Double check that the automatic chock devices are in position and then when the lift is raised, observe the chocks
- Put pads or adapters in the right position under the contact points that have been recommended
- The lift should be raised just until the vehicle's wheels are about one foot off the ground. If contact with the vehicle is uneven or it appears that the vehicle is not sitting secure, carefully lower the lift and readjust.
- Always consider potential problems that might cause a vehicle to slip, i.e., heavy cargo, undercoating, etc.
- Pay attention when walking under a vehicle that is up on the hydraulic lift.

⚠ DANGER

- **DO NOT** leave the controls while the lift is still in motion.
- **DO NOT** stand directly in front of the vehicle or in the bay when vehicle is being loaded or driven into position.
- **DO NOT** Go near vehicle or attempt to work on the vehicle when being raised or lowered.
- **REMAIN CLEAR** of lift when raising or lowering vehicle.
- **DO NOT** rock the vehicle while on the lift or remove any heavy component from vehicle that may cause excessive weight shift.
- **DO NOT** lower the vehicle until people, materials, and tools are clear
- **ALWAYS INSURE** that the safeties are engaged and lowered on to the safety ladders before any attempt is made to work on or near vehicle.
- Some vehicle maintenance and repair activities may cause the vehicle to shift. Follow the manufacturer's guidelines when performing these operations. The use of jack stands or alternate lift points may be required when completing some repairs.
- **READ AND UNDERSTAND** all safety warning procedures before operating lift.
- **KEEP HANDS AND FEET CLEAR**. Remove hands and feet from any moving parts. Keep feet clear of lift when lowering. Avoid pinch points.
- **ONLY TRAINED OPERATORS** should operate this lift. All non-trained personnel should be kept away from work area. Never let non-trained personnel come in contact with, or operate lift.
- **USE LIFT CORRECTLY**. Use lift in the proper manner. Never use lifting adapters other than what is approved by the manufacturer.
- **DO NOT** override self-closing lift controls.
- **CLEAR AREA** if vehicle is on danger of falling.
- **STAY ALERT**. Watch what you are doing. Use common sense. Be aware.
- **CHECK FOR DAMAGED PARTS**. Check for alignment of moving parts, breakage of parts or any condition that may affect its operation. Do not use lift if any component is broken or damaged.
- **NEVER** remove safety related components from the lift. Do not use lift if safety related components are damaged or missing.
- When the lift is being lowered, make sure everyone is standing at least six feet away.
- Be sure there are no jacks, tools, equipment, left under the lift before lowering.
- Always lower the vehicle down slowly and smoothly.

LIFT WILL NOT RAISE

POSSIBLE CAUSE

1. Air in oil, (1,2,8,13)
2. Cylinder binding, (9)
3. Cylinder leaks internally, (9)
4. Motor run backward under pressure, (11)
5. Lowering valve leaks, (3,4,6,10,11)
6. Motor runs backwards, (7,14,11)
7. Pump damaged, (10,11)
8. Pump won't prime, (1,8,13,14,3,12,10,11)
9. Relief valve leaks, (10,11)
10. Voltage to motor incorrect, (7,14,11)

REMEDY	***INSTRUCTION***
1. Check for proper oil level.	The oil level should be up to the bleed screw in the reservoir with the lift all the way down.
2. Bleed cylinders.	See Installation Manual
3. Flush- Release valve to get rid of possible contamination.	Hold release handle down and start unit allowing it to run for 15 seconds.
4. Dirty oil.	Replace oil with clean Dexron ATF.
5. Tighten all fasteners.	Tighten fasteners to recommended torques.
6. Check for free movement of release.	If handle does not move freely, replace bracket or handle assembly.
7. Check motor is wired correctly.	Compare wiring of motor to electrical diagram on drawing.
8. Oil seal damaged or cocked	Replace oil seal around pump shaft.
9. See Installation Manual	Consult Lift Manufacturer.
10. Replace with new part	Replace with new part.
11. Return unit for repair	Return unit for repair.
12. Check pump-mounting bolts	Bolts should be 15 to 18 ft. lbs.
13. Inlet screen clogged	Clean inlet screen or replace.
14. Check wall outlet voltages and wiring	Make sure unit and wall outlet are wired properly.

MOTOR WILL NOT RUN

POSSIBLE CAUSE

1. Fuse blown, (5,2,1,3,4)
2. Limit switch burned out, (1,2,3,4)
3. Microswitch burned out, (1,2,3,4)
4. Motor burned out, (1,2,3,4,6)
5. Voltage to motor incorrect, (2,1,8)

REMEDY	***INSTRUCTION***
1. Check for correct voltage	Compare supply voltage with voltage on motor name tag. Check that the wire is sized correctly. N.E.C. table 310-12 requires AWG 10 for 25 Amps.
2. Check motor is wired correctly	Compare wiring of motor to electrical diagram on drawing.
3. Don't use extension cords	According to N.E.C. : " The size of the conductors… should be such that the voltage drop would not exceed 3% to the farthest outlet for power…" Do not run motor at 115 VAC – damage to the motor will occur.
4. Replace with new part	Replace with new part.
5. Reset circuit breaker/fuse	Reset circuit breaker/fuse.
6. Return unit for repair	Return unit for repair.
7. See Installation Manual	See Installation Manual.
8. Check wall outlet voltage and wiring	Make sure unit and wall outlet is wired properly. Motor must run at 208/230 VAC.

LIFT LOWERS SLOWLY OR NOT AT ALL

POSSIBLE CAUSE

1. Cylinders binding, (1)
2. Release valve clogged, (5,4,2,3)
3. Pressure fitting too long, (6)

REMEDY	***INSTRUCTION***
1. See Installation Manual	Consult Lift Manufacturer.
2. Replace with new part	Replace with new part.
3. Return for repair	Return for repair.
4. Check oil.	Use clean 10-WT hydraulic oil or Dexron-III automatic transmission fluid only. If ATF is contaminated, replace with clean ATF and clean entire system.
5. Clean release valve	Wash release valve in solvent and blow out with air.
6. Replace fitting with short thread lead	Replace fitting with short thread lead.

WILL NOT RAISE LOADED LIFT

POSSIBLE CAUSE

1. Air in oil, (1,2,3,4)
2. Cylinder binding, (5)
3. Cylinder leaks internally, (5)
4. Lift overloaded, (6,5)
5. Lowering valve leaks, (7,8,1,5,9)
6. Motor runs backwards, (10,12,9)
7. Pump damaged, (5,9)
8. Pump won't prime, (1,2,3,4,5,11,9)
9. Relief valve leaks, (8,5,9)
10. Voltage to motor incorrect, (10,12,5)

REMEDY	***INSTRUCTION***
1. Check oil level	The oil level should be up to the bleed screw in the reservoir [with the lift all the way down.
2. Check/Tighten inlet tubes	Replace inlet hose assembly.
3. Oil seal damaged or cocked	Replace oil seal and install.
4. Bleed cylinders	See Installation Manual.
5. See Installation Manual	Consult Lift Manufacturer.
6. Check vehicle weight	Compare weight of vehicle to weight limit of the lift.
7. Flush release valve	Hold release handle down and start unit allowing it to run for 15 seconds.
8. Replace with new part	Replace with new part.
9. Return unit for repair	Return unit for repair.
10. Check motor is wired correctly	Compare wiring of motor to electrical diagram on power unit drawing.
11. Inlet screen clogged	Clean inlet screen or replace.
12. Check wall outlet voltage and wiring	Make sure unit and wall outlet is wired properly.

LIFT WILL NOT STAY UP

POSSIBLE CAUSE

1. Air in oil, (1,2,3)
2. Check valve leaks, (6)
3. Cylinders leak internally, (7)
4. Lowering valve leaks, (4,5,1,7,6)
5. Leaking fittings, (8)

REMEDY	***INSTRUCTION***
1. Check oil level	The oil level should be up to the bleed screw in the reservoir with the lift all the way down.
2. Oil seal damaged and cocked	Replace oil seal around pump shaft.
3. Bleed cylinder	Refer to Installation Manual.
4. Flush release valve	Hold release handle down and start unit allowing it to run for 15 seconds.
5. Replace with new valve	Replace with new valve.
6. Return unit for repair	Return unit for repair.
7. See Installation Manual	Consult Lift Manufacturer.
8. Check complete hydraulic system for leaks.	Tighten all hydraulics fittings and inspects all hoses.

INSTALLATION FORM

Customer Name:		Date of Installation:
Company Name:		
Street Address:		
City:	State:	Zip:
Phone:	Fax:	

Pre-Install Agreement

I, (the undersigned) acting as the owner of the business listed above assume responsibility for any permits required, either state or county mandated, related to the installation and/or operation of this equipment. I assume responsibility for the concrete floor and condition thereof, now or later, where the above equipment model(s) are installed. I will assume all liability for losses, damages (including loss of use), expenses, demands, claims, and judgments in connection with or arising out of any personal injury or alleged damage to property, sustained or alleged to have been sustained in connection with, or to have arisen out of the condition and/or drilling of the concrete near or adjacent to the equipment model(s) listed above. If my employee(s) offer assistance of any kind during installation of the above equipment model(s) I hold the manufacturer and installation company harmless of all liability for losses, damages, expenses, claims, and judgments in connection with or arising out of any personal injury or alleged damage to property, sustained or alleged to have been sustained in connection with the installation of the above equipment model(s).

I understand that the lifts above are supplied with concrete fasteners meeting the criteria of the American National Standard "Automotive Lifts - Safety Requirements for Construction, Testing, and Validation" ANSI/ALI ALCTV-1998, and that I will be responsible for all charges related to any special regional structural and/or seismic anchoring requirements specified by any other agencies and/or codes such as the Uniform Building Code (UBC) and/or International Building Code (IBC).

Customer Signature: Print Name: Date:

Post-Installation Check-Off

☐ Base and Columns Properly Shimmed And Stable	☐ Lubrication of Critical Components
☐ Anchor Bolts Tightened	☐ Lift Adapters
☐ Runways Properly Attached and Secured	☐ Check For Overhead Obstructions
☐ Electric Power Supply Confirmed	☐ Runways Level
☐ Cables / Chains Adjusted Properly	☐ All Screws, Bolts, and Pins Secured
☐ Safety Locks Functioning Properly	☐ Surrounding Area and Lift Clean In Appearance
☐ Check For Hydraulic Leaks	☐ Proper Operation, Maintenance and Safety Explained
☐ Oil Level	☐ Operation and Safety Manual(s) Left at Site

I, (the undersigned) confirm that the above installation procedure(s) were completed. I understand that I will be responsible for maintaining this equipment as outlined in the accompanied ***Installation and Operation Manual*** and ***ANSI/ALI ALOIM Safety Requirements for Operation, Inspection and Maintenance***. I understand that personal injury and/or damage to property can occur if the above equipment model(s) are not maintained or used improperly and take full responsibility for training my employees on proper use and maintenance of this equipment. I hold the manufacturer and installation company harmless of all liability for losses, damages (including loss of use), expenses, demands, claims, and judgments in connection with or related to improper use, improper training, or lack of required maintenance. I understand that the warranty does not cover replacement of parts worn or damaged due to normal use or lack of required maintenance

Customer Signature: Print Name: Date:

Installer Signature:	Print Name:	Date:
Installer Company Name:		
Street Address:		
City:	State:	Zip:
Phone:	Phone (Other):	

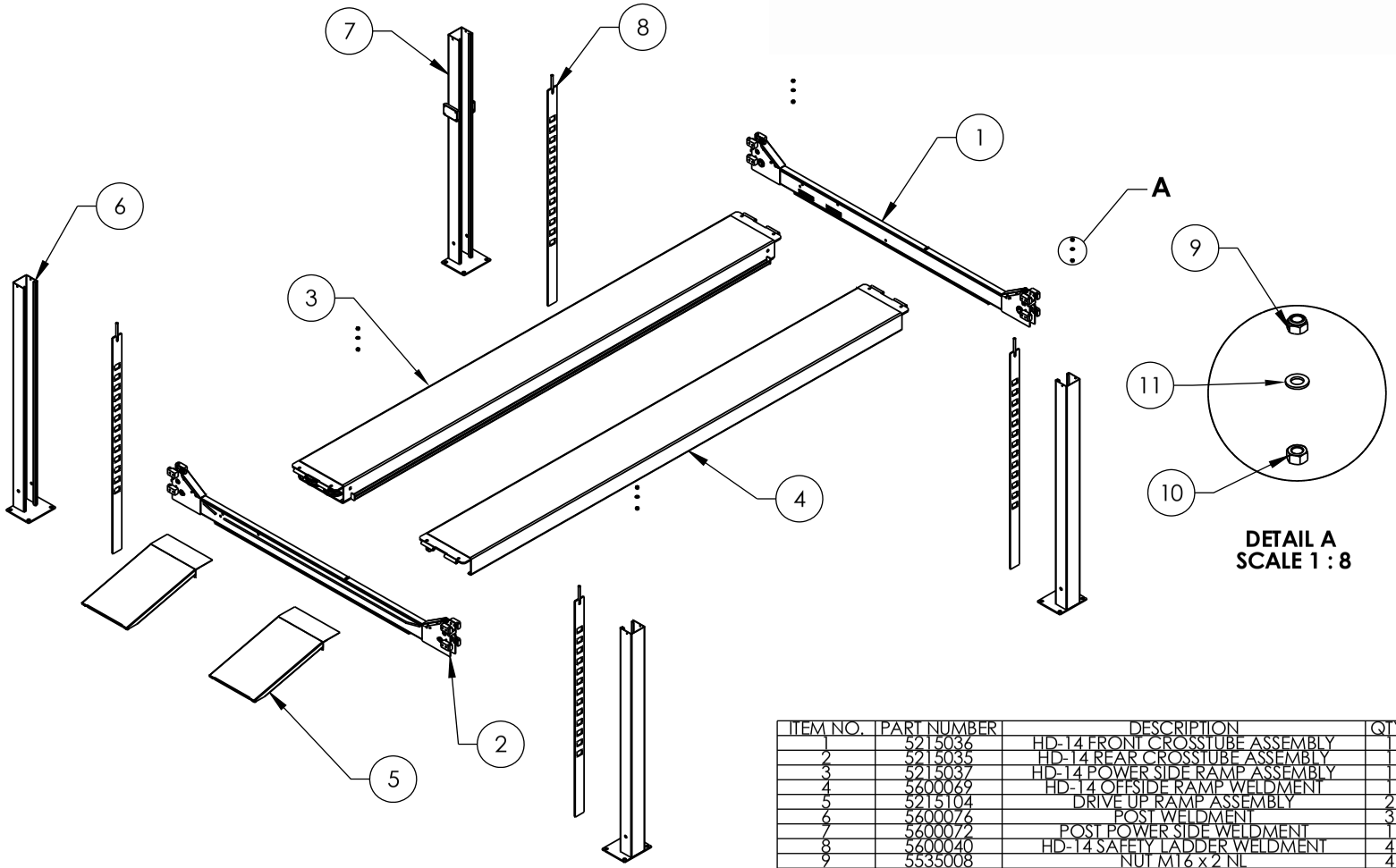

DETAIL A
SCALE 1 : 8

ITEM NO.	PART NUMBER	DESCRIPTION	QTY.	REV
1	5215036	HD-14 FRONT CROSSTUBE ASSEMBLY	1	D
2	5215035	HD-14 REAR CROSSTUBE ASSEMBLY	1	D
3	5215037	HD-14 POWER SIDE RAMP ASSEMBLY	1	E
4	5600069	HD-14 OFFSIDE RAMP WELDMENT	1	D
5	5215104	DRIVE UP RAMP ASSEMBLY	2	D
6	5600076	POST WELDMENT	3	B
7	5600072	POST POWER SIDE WELDMENT	1	C
8	5600040	HD-14 SAFETY LADDER WELDMENT	4	D
9	5535008	NUT M16 x 2 NL	4	-
10	5535021	NYLOCK HEX NUT M16 x 2	4	-
11	5545025	WASHER M16 x 30mm FLAT	4	-

NOTE: UNLESS OTHERWISE SPECIFIED.

1. FASTEN NUTS, NYLOCK NUTS AND WASHERS ONTO ENDS OF SAFETY LADDERS FOR SHIPMENT
2. SEE SHIPPING INSTRUCTIONS FOR FINAL PACKAGING

NEXT ASSEMBLY
5260161

DO NOT SCALE DRAWING

DIMENSIONS ARE IN MM

	NAME	DATE
DRAWN	AC	12/24/2007
CHECKED	TM	09/26/2008

THIRD ANGLE PROJECTION

MATERIAL: ---

SIZE: ---

PROPRIETARY AND CONFIDENTIAL
THE INFORMATION CONTAINED IN THIS DRAWING IS THE SOLE PROPERTY OF **BENDPAK INC.** ANY REPRODUCTION IN PART OR AS A WHOLE WITHOUT THE WRITTEN PERMISSION OF **BENDPAK INC.** IS PROHIBITED.

BendPak. 1645 LEMONWOOD DR. SANTA PAULA, CA 93060

TITLE:
HD-14 LIFT SUPERSTRUCTURE

SIZE	DWG. NO.	REV
A	5245008	F

SCALE: 1:50 SHEET 1 OF 1

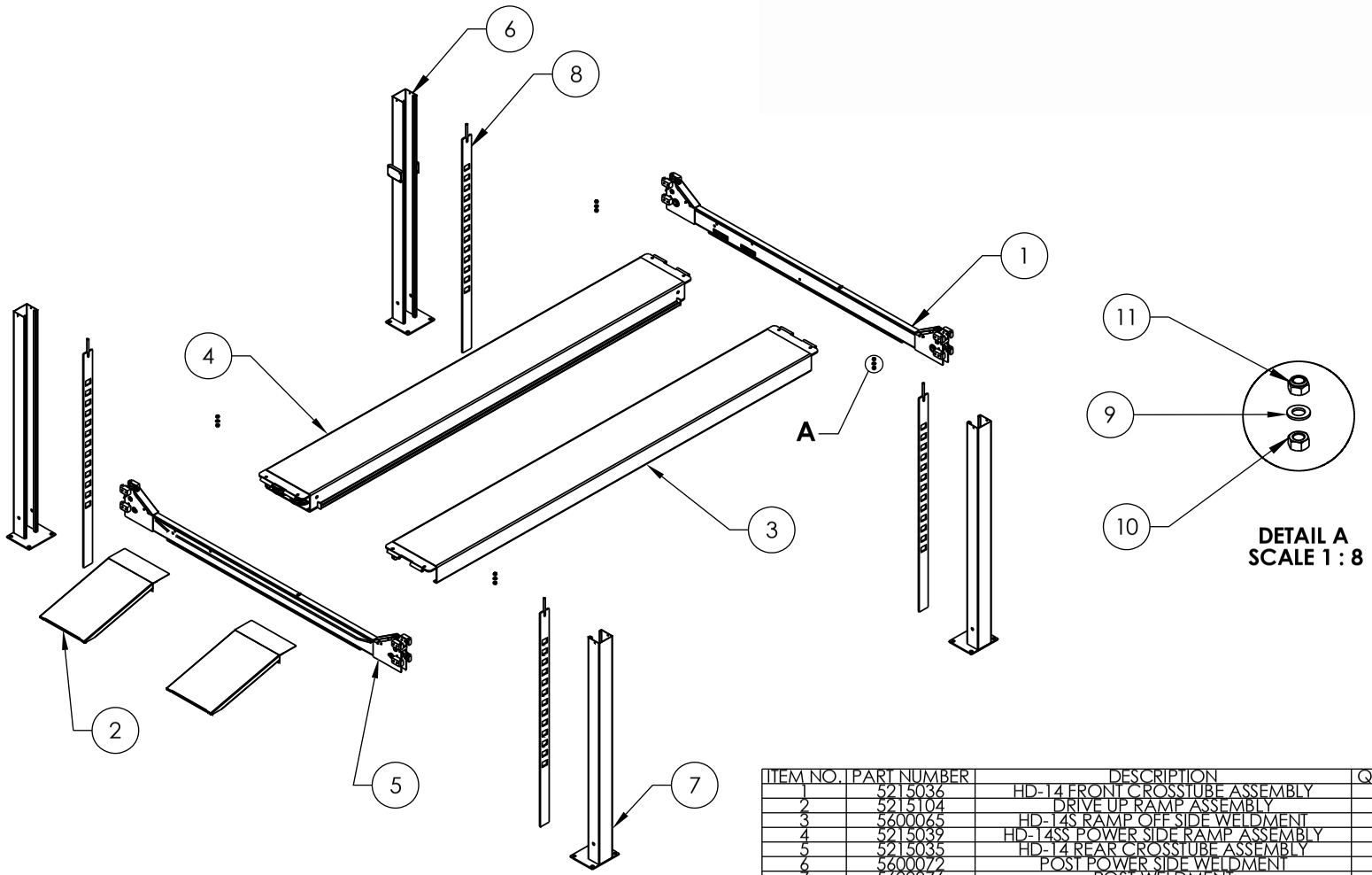

DETAIL A
SCALE 1 : 8

ITEM NO.	PART NUMBER	DESCRIPTION	QTY.	REV
1	5215036	HD-14 FRONT CROSSTUBE ASSEMBLY	1	D
2	5215104	DRIVE UP RAMP ASSEMBLY	2	D
3	5600065	HD-14S RAMP OFF SIDE WELDMENT	1	D
4	5215039	HD-14SS POWER SIDE RAMP ASSEMBLY	1	E
5	5215035	HD-14 REAR CROSSTUBE ASSEMBLY	1	D
6	5600072	POST POWER SIDE WELDMENT	1	C
7	5600076	POST WELDMENT	3	B
8	5600040	HD-14 SAFETY LADDER WELDMENT	4	D
9	5545025	WASHER M16 x 30mm FLAT	4	-
10	5535021	NYLOCK HEX NUT M16 x 2	4	-
11	5535008	NUT M16 x 2 NL	4	-

NOTE: UNLESS OTHERWISE SPECIFIED.

1. FASTEN NUTS, NYLOCK NUTS AND WASHERS ONTO ENDS OF SAFETY LADDER FOR SHIPMENT
2. SEE SHIPPING INSTRUCTIONS FOR FINAL PACKAGING

NEXT ASSEMBLY
5260165

		NAME	DATE
DO NOT SCALE DRAWING	DRAWN	AC	12/26/2007
DIMENSIONS ARE IN MM	CHECKED	TM	10/15/2008

THIRD ANGLE PROJECTION

MATERIAL: ---
SIZE: ---

PROPRIETARY AND CONFIDENTIAL
THE INFORMATION CONTAINED IN THIS DRAWING IS THE SOLE PROPERTY OF **BENDPAK INC.** ANY REPRODUCTION IN PART OR AS A WHOLE WITHOUT THE WRITTEN PERMISSION OF **BENDPAK INC.** IS PROHIBITED.

BendPak. 1645 LEMONWOOD DR. SANTA PAULA, CA 93060

TITLE: HD-14SS LIFT SUPERSTRUCTURE

SIZE	DWG. NO.	REV
A	5245016	F

SCALE: 1:50 | SHEET 1 OF 1

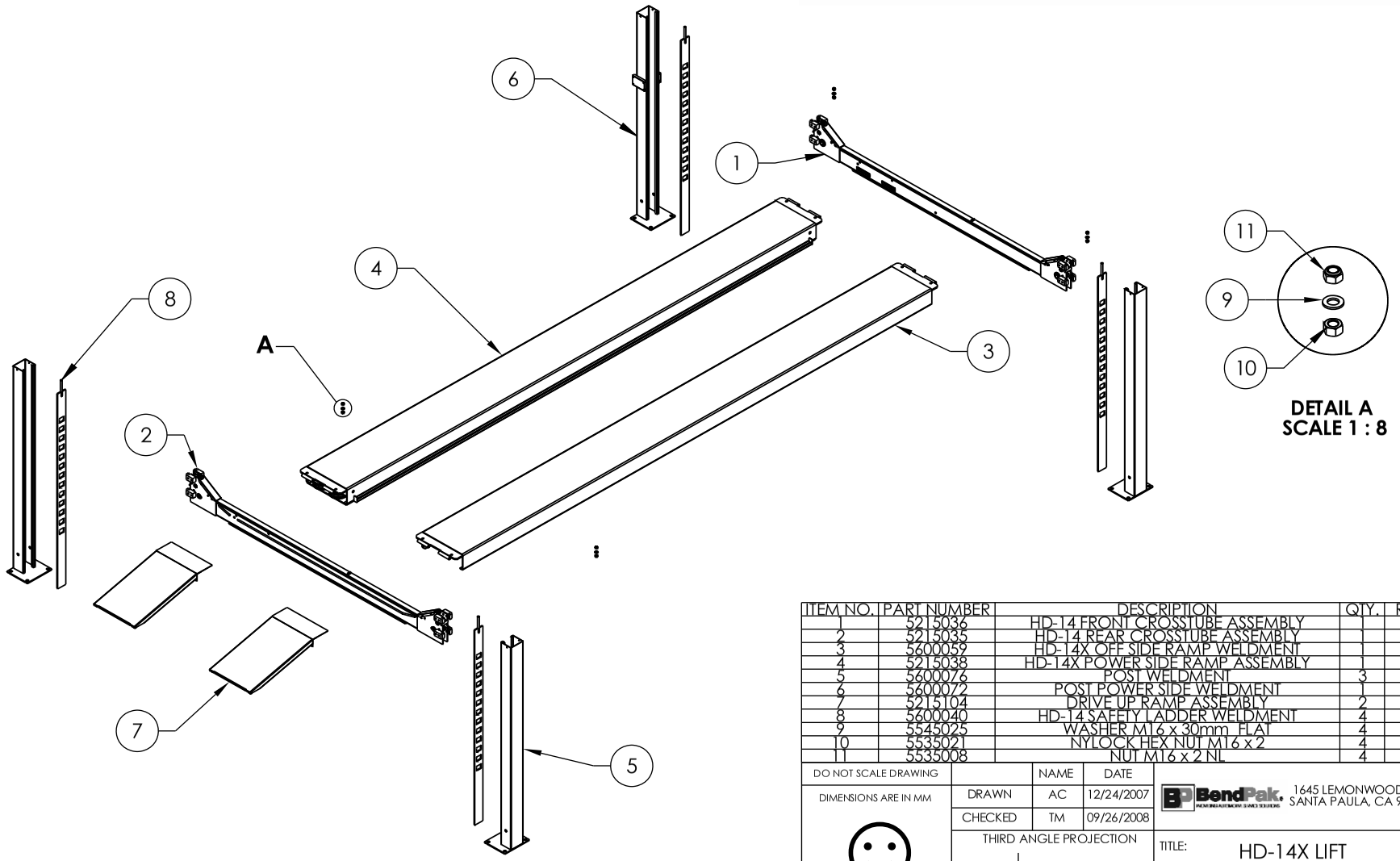

ITEM NO.	PART NUMBER	DESCRIPTION	QTY.	REV
1	5215036	HD-14 FRONT CROSSTUBE ASSEMBLY	1	D
2	5215035	HD-14 REAR CROSSTUBE ASSEMBLY	1	D
3	5600059	HD-14X OFF SIDE RAMP WELDMENT	1	D
4	5215038	HD-14X POWER SIDE RAMP ASSEMBLY	1	E
5	5600076	POST WELDMENT	3	B
6	5600072	POST POWER SIDE WELDMENT	1	C
7	5215104	DRIVE UP RAMP ASSEMBLY	2	D
8	5600040	HD-14 SAFETY LADDER WELDMENT	4	D
9	5545025	WASHER M16 x 30mm FLAT	4	-
10	5535021	NYLOCK HEX NUT M16 x 2	4	-
11	5535008	NUT M16 x 2 NL	4	-

NOTE: UNLESS OTHERWISE SPECIFIED.

1. FASEN NUTS, NYLOCK NUTS AND WASHERS ONTO ENDS OF SAFETY LADDERS FOR SHIPMENT
2. SEE SHIPPING INSTRUCTIONS FOR FINAL PACKAGING

NEXT ASSEMBLY
5260166

DO NOT SCALE DRAWING

DIMENSIONS ARE IN MM

MATERIAL: ---

SIZE: ---

	NAME	DATE
DRAWN	AC	12/24/2007
CHECKED	TM	09/26/2008

THIRD ANGLE PROJECTION

PROPRIETARY AND CONFIDENTIAL
THE INFORMATION CONTAINED IN THIS DRAWING IS THE SOLE PROPERTY OF **BENDPAK INC.** ANY REPRODUCTION IN PART OR AS A WHOLE WITHOUT THE WRITTEN PERMISSION OF **BENDPAK INC.** IS PROHIBITED.

BendPak. 1645 LEMONWOOD DR. SANTA PAULA, CA 93060

TITLE: HD-14X LIFT SUPERSTRUCTURE

SIZE	DWG. NO.	REV
A	5245018	F

SCALE: 1:50 SHEET 1 OF 1

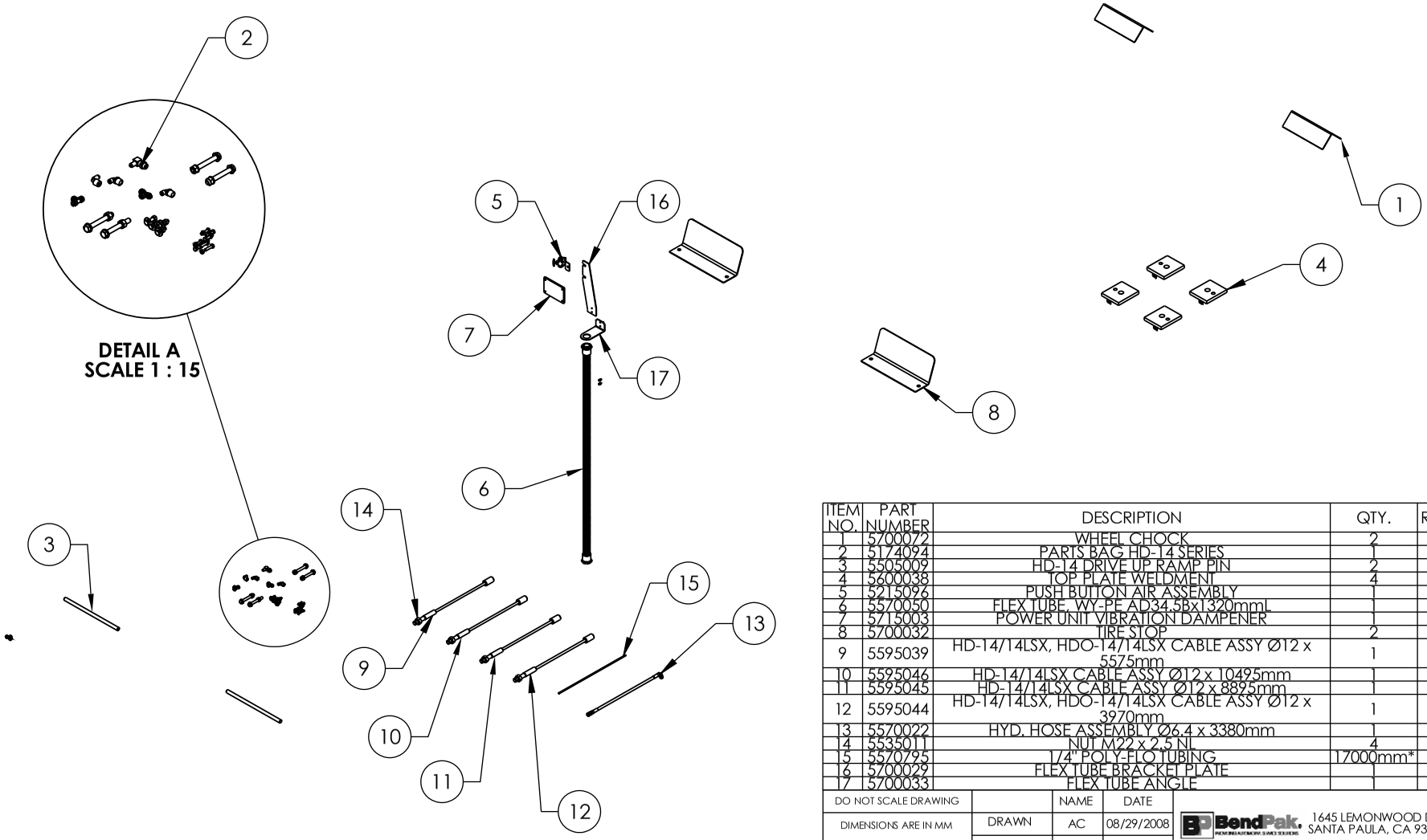

ITEM NO.	PART NUMBER	DESCRIPTION	QTY.	REV
1	5700072	WHEEL CHOCK	2	A
2	5174094	PARTS BAG HD-14 SERIES	1	A
3	5505009	HD-14 DRIVE UP RAMP PIN	2	C
4	5600038	TOP PLATE WELDMENT	4	B
5	5215096	PUSH BUTTON AIR ASSEMBLY	1	B
6	5570050	FLEX TUBE, WY-PE AD34.5Bx1320mmL	1	A
7	5715003	POWER UNIT VIBRATION DAMPENER	1	B
8	5700032	TIRE STOP	2	B
9	5595039	HD-14/14LSX, HDO-14/14LSX CABLE ASSY Ø12 x 5575mm	1	D
10	5595046	HD-14/14LSX CABLE ASSY Ø12 x 10495mm	1	D
11	5595045	HD-14/14LSX CABLE ASSY Ø12 x 8895mm	1	D
12	5595044	HD-14/14LSX, HDO-14/14LSX CABLE ASSY Ø12 x 3970mm	1	D
13	5570022	HYD. HOSE ASSEMBLY Ø6.4 x 3380mm	1	D
14	5535011	NUT M22 x 2.5 NL	4	-
15	5570795	1/4" POLY-FLO TUBING	17000mm*	-
16	5700029	FLEX TUBE BRACKET PLATE	1	C
17	5700033	FLEX TUBE ANGLE	1	C

NOTE: UNLESS OTHERWISE SPECIFIED.

1. SEE SHIPPING INSTRUCTIONS FOR FINAL PACKAGING
2. THREAD NYLOCK NUTS ONTO CABLES PRIOR TO PACKAGING
3. HOSES AND CABLES IN REPRESENTATIONAL FORM
4. (*) LENGTHS FOR REFERENCE ONLY

NEXT ASSEMBLY: 5260161

DO NOT SCALE DRAWING

DIMENSIONS ARE IN MM

MATERIAL: ---

SIZE: ---

	NAME	DATE
DRAWN	AC	08/29/2008
CHECKED	TM	10/03/2008

THIRD ANGLE PROJECTION

PROPRIETARY AND CONFIDENTIAL
THE INFORMATION CONTAINED IN THIS DRAWING IS THE SOLE PROPERTY OF **BENDPAK INC.** ANY REPRODUCTION IN PART OR AS A WHOLE WITHOUT THE WRITTEN PERMISSION OF **BENDPAK INC.** IS PROHIBITED.

BendPak. 1645 LEMONWOOD DR. SANTA PAULA, CA 93060

TITLE: PARTS BOX HD-14

SIZE	DWG. NO.	REV
A	5250302	A

SCALE: 1:30 SHEET 1 OF 1

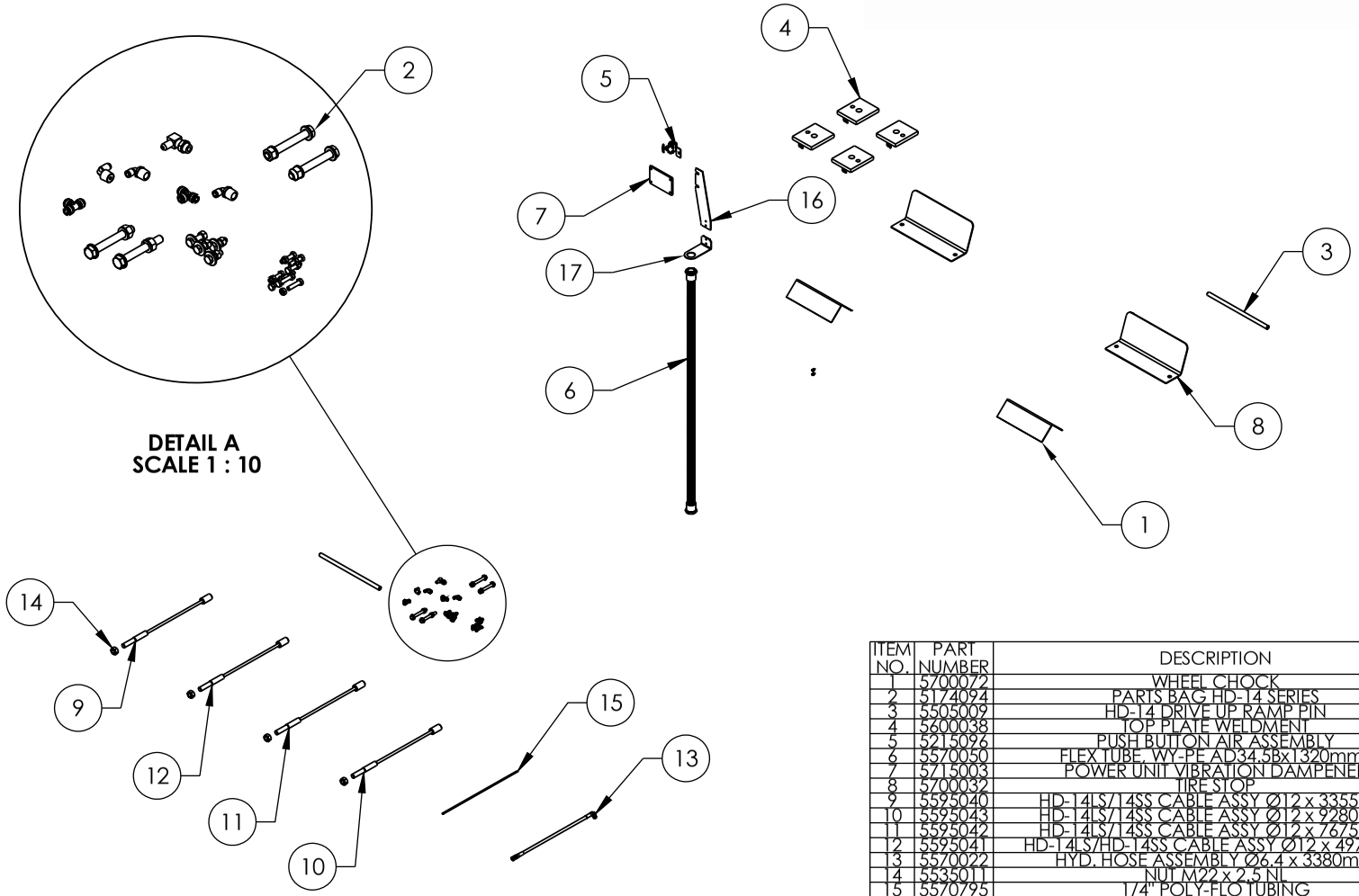

ITEM NO.	PART NUMBER	DESCRIPTION	QTY.	REV
1	5700072	WHEEL CHOCK	2	A
2	5174094	PARTS BAG HD-14 SERIES	1	A
3	5505009	HD-14 DRIVE UP RAMP PIN	2	C
4	5600038	TOP PLATE WELDMENT	4	B
5	5215096	PUSH BUTTON AIR ASSEMBLY	1	B
6	5570050	FLEX TUBE, WY-PE AD34.5Bx1320mmL	1	A
7	5715003	POWER UNIT VIBRATION DAMPENER	1	B
8	5700032	TIRE STOP	2	B
9	5595040	HD-14LS/14SS CABLE ASSY Ø12 x 3355mm	1	D
10	5595043	HD-14LS/14SS CABLE ASSY Ø12 x 9280mm	1	D
11	5595042	HD-14LS/14SS CABLE ASSY Ø12 x 7675mm	1	D
12	5595041	HD-14LS/HD-14SS CABLE ASSY Ø12 x 4970mm	1	D
13	5570022	HYD. HOSE ASSEMBLY Ø6.4 x 3380mm	1	D
14	5535011	NUT M22 x 2.5 NL	4	-
15	5570795	1/4" POLY-FLO TUBING	17000mm*	-
16	5700029	FLEX TUBE BRACKET PLATE	1	C
17	5700033	FLEX TUBE ANGLE	1	C

NOTE: UNLESS OTHERWISE SPECIFIED.

1. SEE SHIPPING INSTRUCTIONS FOR FINAL PACKAGING
2. THREAD NYLOCK NUTS ONTO CABLES PRIOR TO SHIPMENT
3. HOSES ANDD CABLES IN REPRESENTATIONAL FORM
4. (*) LENGTHS FOR REFERENCE ONLY

NEXT ASSEMBLY: 5260165

DO NOT SCALE DRAWING

DIMENSIONS ARE IN MM

	NAME	DATE
DRAWN	AC	08/29/2008
CHECKED	TM	10/15/2008

THIRD ANGLE PROJECTION

MATERIAL: ---

SIZE: ---

PROPRIETARY AND CONFIDENTIAL
THE INFORMATION CONTAINED IN THIS DRAWING IS THE SOLE PROPERTY OF BENDPAK INC. ANY REPRODUCTION IN PART OR AS A WHOLE WITHOUT THE WRITTEN PERMISSION OF BENDPAK INC. IS PROHIBITED.

BendPak. 1645 LEMONWOOD DR. SANTA PAULA, CA 93060

TITLE: PARTS BOX HD-14SS

SIZE	DWG. NO.	REV
A	5250306	A

SCALE: 1:30 SHEET 1 OF 1

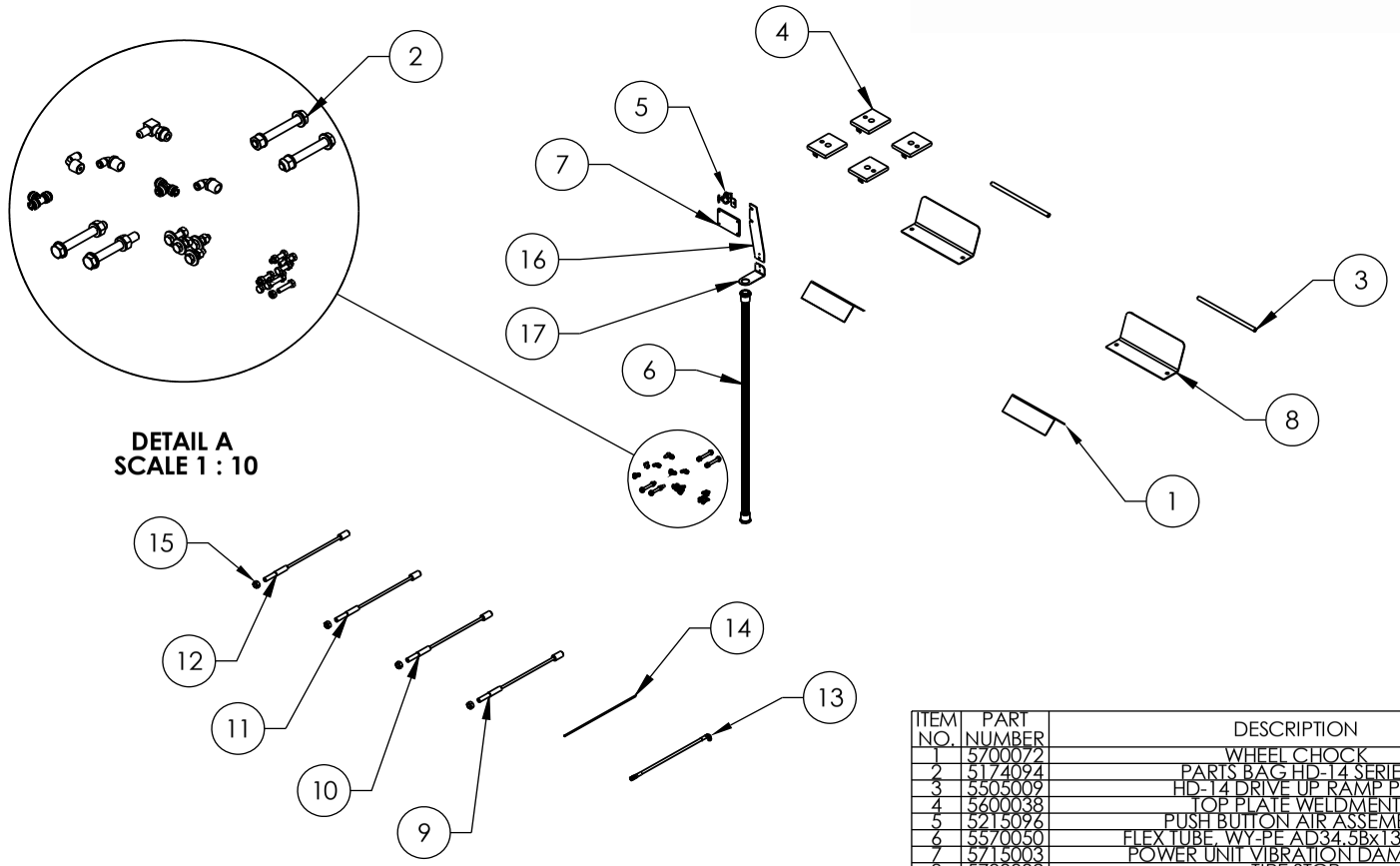

ITEM NO.	PART NUMBER	DESCRIPTION	QTY.	REV
1	5700072	WHEEL CHOCK	2	A
2	5174094	PARTS BAG HD-14 SERIES	1	A
3	5505009	HD-14 DRIVE UP RAMP PIN	2	C
4	5600038	TOP PLATE WELDMENT	4	B
5	5215096	PUSH BUTTON AIR ASSEMBLY	1	B
6	5570050	FLEX TUBE, WY-PE AD34.5Bx1320mmL	1	A
7	5715003	POWER UNIT VIBRATION DAMPENER	1	B
8	5700032	TIRE STOP	2	B
9	5595008	HD-14LSXE/14X CABLE ASSY Ø12 x 10820mm	1	D
10	5595006	HD-14LSXE/14X CABLE ASSY Ø12 x 12425mm	1	D
11	5595004	HD-14LSXE/14X CABLE ASSY Ø12 x 4935mm	1	D
12	5595002	HD-14LSX/14X CABLE ASSY Ø12 x 6540mm	1	D
13	5570022	HYD. HOSE ASSEMBLY Ø6.4 x 3380mm	1	D
14	5570795	1/4" POLY-FLO TUBING	17000mm*	-
15	5535011	NUT M22 x 2.5 NL	4	-
16	5700029	FLEX TUBE BRACKET PLATE	1	C
17	5700033	FLEX TUBE ANGLE	1	C

NOTE: UNLESS OTHERWISE SPECIFIED.

1. SEE SHIPPING INSTRUCTIONS FOR FINAL PACKAGING
2. THREAD NYLOCK NUTS ONTO CABLES PRIOR TO SHIPMENT
3. HOSES AND CABLES IN REPRESENTATIONAL FORM
4. (*) LENGTHS FOR REFERENCE ONLY

NEXT ASSEMBLY: 5260166

DO NOT SCALE DRAWING

DIMENSIONS ARE IN MM

MATERIAL: ---

SIZE: ---

	NAME	DATE
DRAWN	AC	08/29/2008
CHECKED	TM	10/03/2008

THIRD ANGLE PROJECTION

PROPRIETARY AND CONFIDENTIAL
THE INFORMATION CONTAINED IN THIS DRAWING IS THE SOLE PROPERTY OF **BENDPAK INC.** ANY REPRODUCTION IN PART OR AS A WHOLE WITHOUT THE WRITTEN PERMISSION OF **BENDPAK INC.** IS PROHIBITED.

BendPak. 1645 LEMONWOOD DR. SANTA PAULA, CA 93060

TITLE: PARTS BOX HD-14X

SIZE	DWG. NO.	REV
A	5250308	A

SCALE: 1:35 SHEET 1 OF 1

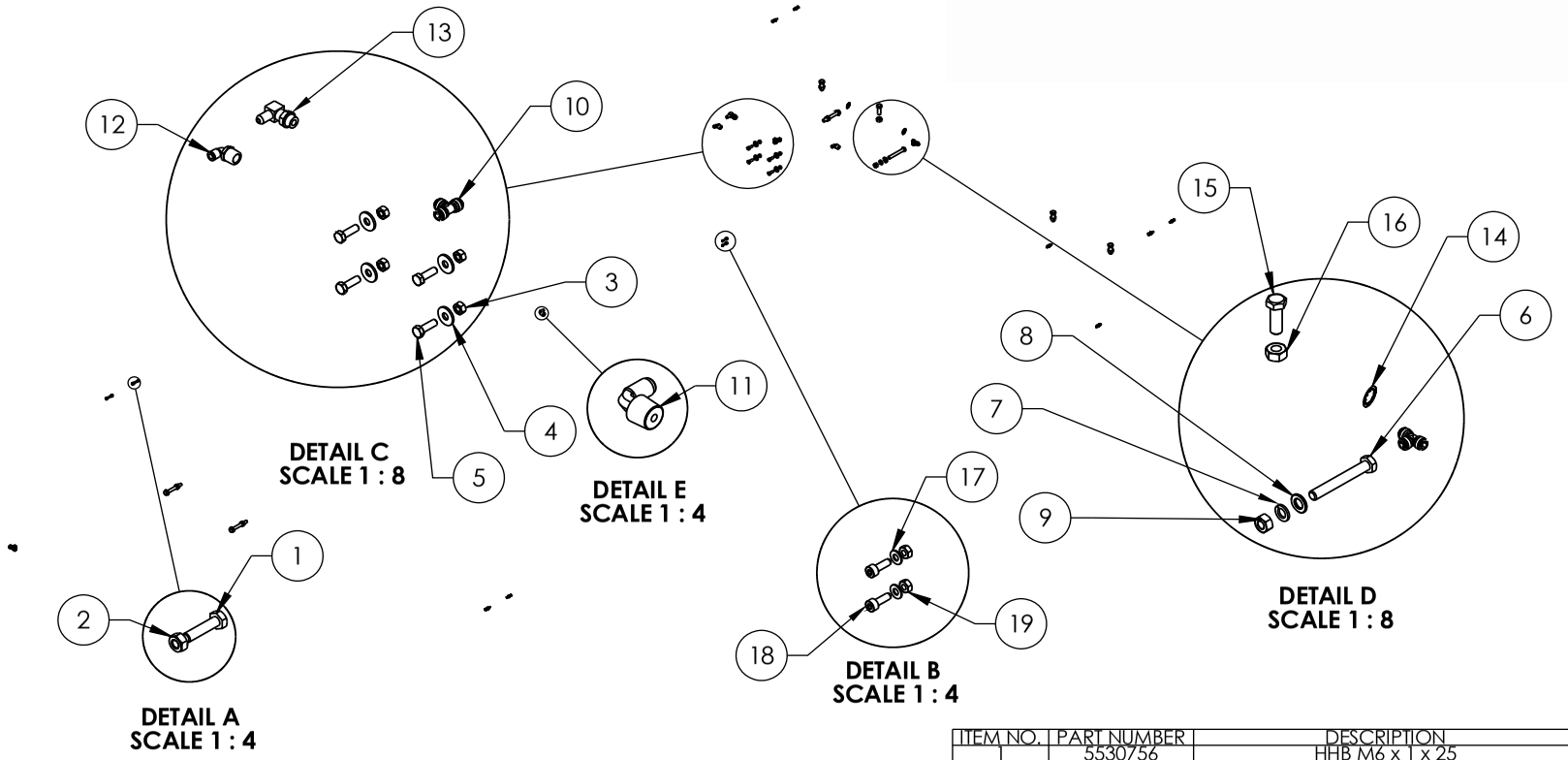

ITEM NO.	PART NUMBER	DESCRIPTION	QTY.	REV
1	5530756	HHB M6 x 1 x 25	8	-
2	5535357	NUT M6 x 1.0 NL	8	-
3	5535001	NUT M8 x 1.25 NL	4	-
4	5545340	WASHER M8 x24 FLAT	4	-
5	5530010	HHB M8 x 1.25 x 25	4	-
6	5530009	HHB M12 x 1.75 x 90 CL10.9	4	-
7	5545201	WASHER, M12 SPRING LOCK	4	-
8	5545347	WASHER, M12 FLAT WASHER	4	-
9	5535354	HEX NUT M12 x1.75	4	-
10	5550489	FTG TEE 1/4-1/4-1/4 TUBE INS	3	-
11	5550106	FTG ELB -04 JIC-06 NPT	1	-
12	5555004	FTG, AIR ELB 3/8"NPT X Ø1/4"	2	-
13	5550008	FTG ELB -04 JIC -06L ORB	1	-
14	5505032	ROTOR CLIP 18mm SS	4	-
15	5530107	HHB M14 x 2.0 x 40	4	-
16	5535107	NUT M14 x 2.0	4	-
17	5545009	WASHER, Ø4.3 x Ø9mm x 0.8mm	2	-
18	5530008	SHCS M4 x 0.7mm x 12mm	2	-
19	5535010	Nut, M4 X 0.7	2	-

DO NOT SCALE DRAWING

DIMENSIONS ARE IN MM

	NAME	DATE
DRAWN	AC	08/08/2008
CHECKED	TM	09/05/2008

THIRD ANGLE PROJECTION

BendPak. 1645 LEMONWOOD DR. SANTA PAULA, CA 93060

TITLE: PARTS BAG HD-14 SERIES

NEXT ASSEMBLY
5250302
5250306
5250307
5250308

MATERIAL: ---

SIZE: ---

PROPRIETARY AND CONFIDENTIAL
THE INFORMATION CONTAINED IN THIS DRAWING IS THE SOLE PROPERTY OF **BENDPAK INC.** ANY REPRODUCTION IN PART OR AS A WHOLE WITHOUT THE WRITTEN PERMISSION OF **BENDPAK INC.** IS PROHIBITED.

SIZE	DWG. NO.	REV
A	5174094	A

SCALE: 1:30 SHEET 1 OF 1

NOTE: UNLESS OTHERWISE SPECIFIED.

1. SEE SHIPPING INSTRUCTIONS FOR FINAL PACKAGING

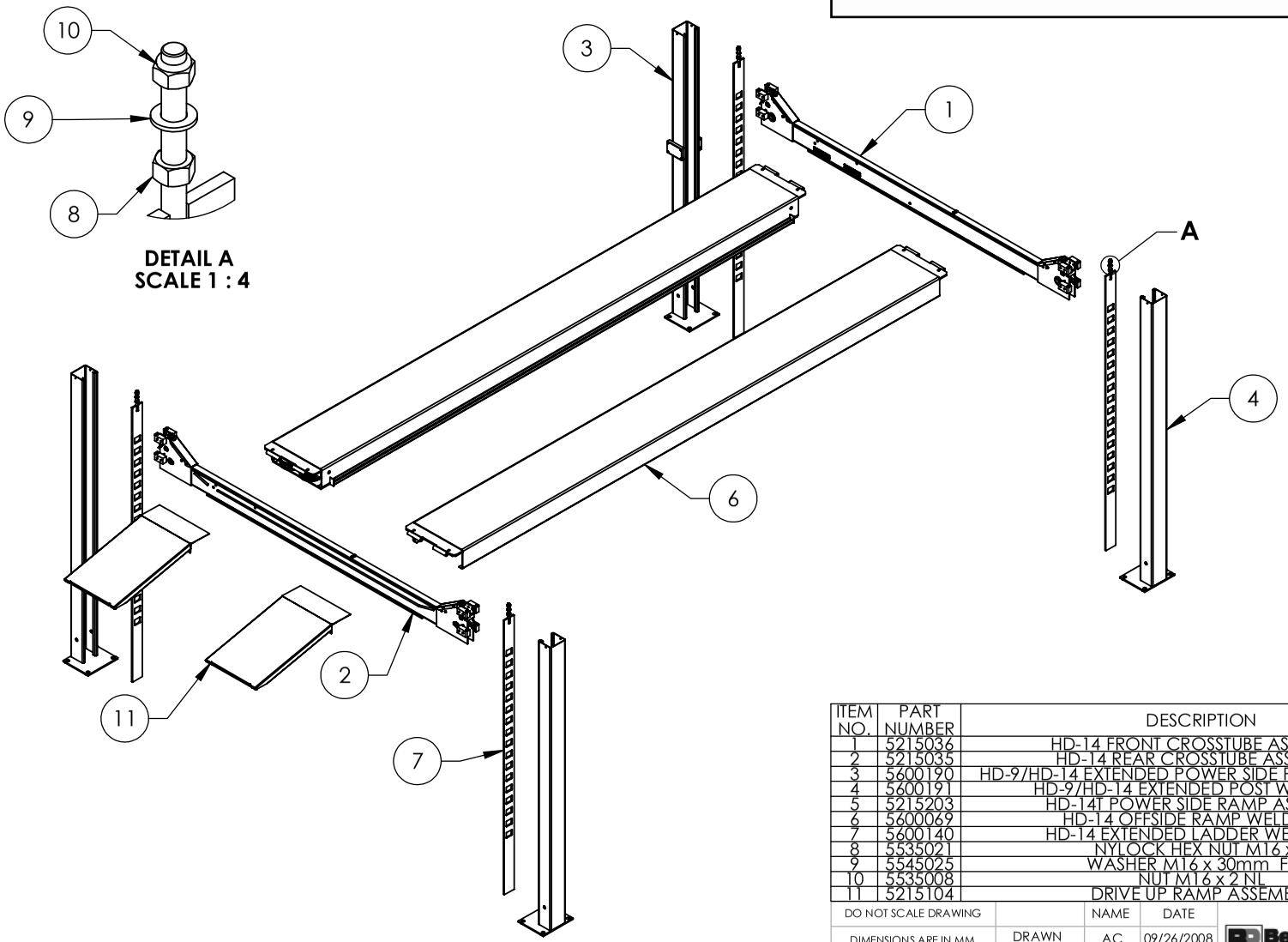

ITEM NO.	PART NUMBER	DESCRIPTION	QTY	REV
1	5215036	HD-14 FRONT CROSSTUBE ASSEMBLY	1	D
2	5215035	HD-14 REAR CROSSTUBE ASSEMBLY	1	D
3	5600190	HD-9/HD-14 EXTENDED POWER SIDE POST WELDMENT	1	A
4	5600191	HD-9/HD-14 EXTENDED POST WELDMENT	3	A
5	5215203	HD-14T POWER SIDE RAMP ASSEMBLY	1	C
6	5600069	HD-14 OFFSIDE RAMP WELDMENT	1	D
7	5600140	HD-14 EXTENDED LADDER WELDMENT	4	A
8	5535021	NYLOCK HEX NUT M16 x 2	4	B
9	5545025	WASHER M16 x 30mm FLAT	4	-
10	5535008	NUT M16 x 2 NL	4	-
11	5215104	DRIVE UP RAMP ASSEMBLY	2	-

NOTE: UNLESS OTHERWISE SPECIFIED.

1. FASEN NUTS, NYLOCK NUTS AND WASHERS ONTO ENDS OF SAFETY LADDERS FOR SHIPMENT
2. SEE SHIPPING INSTRUCTIONS FOR FINAL PACKAGING

NEXT ASSEMBLY: 5260160

DO NOT SCALE DRAWING

DIMENSIONS ARE IN MM

MATERIAL: ---

SIZE: ---

	NAME	DATE
DRAWN	AC	09/26/2008
CHECKED	TM	01/29/2009

THIRD ANGLE PROJECTION

PROPRIETARY AND CONFIDENTIAL
THE INFORMATION CONTAINED IN THIS DRAWING IS THE SOLE PROPERTY OF **BENDPAK INC.** ANY REPRODUCTION IN PART OR AS A WHOLE WITHOUT THE WRITTEN PERMISSION OF **BENDPAK INC.** IS PROHIBITED.

BendPak. 1645 LEMONWOOD DR. SANTA PAULA, CA 93060

TITLE: HD-14T LIFT SUPERSTRUCTURE

SIZE	DWG. NO.	REV
A	5245022	C

SCALE: 1:45 SHEET 1 OF 1

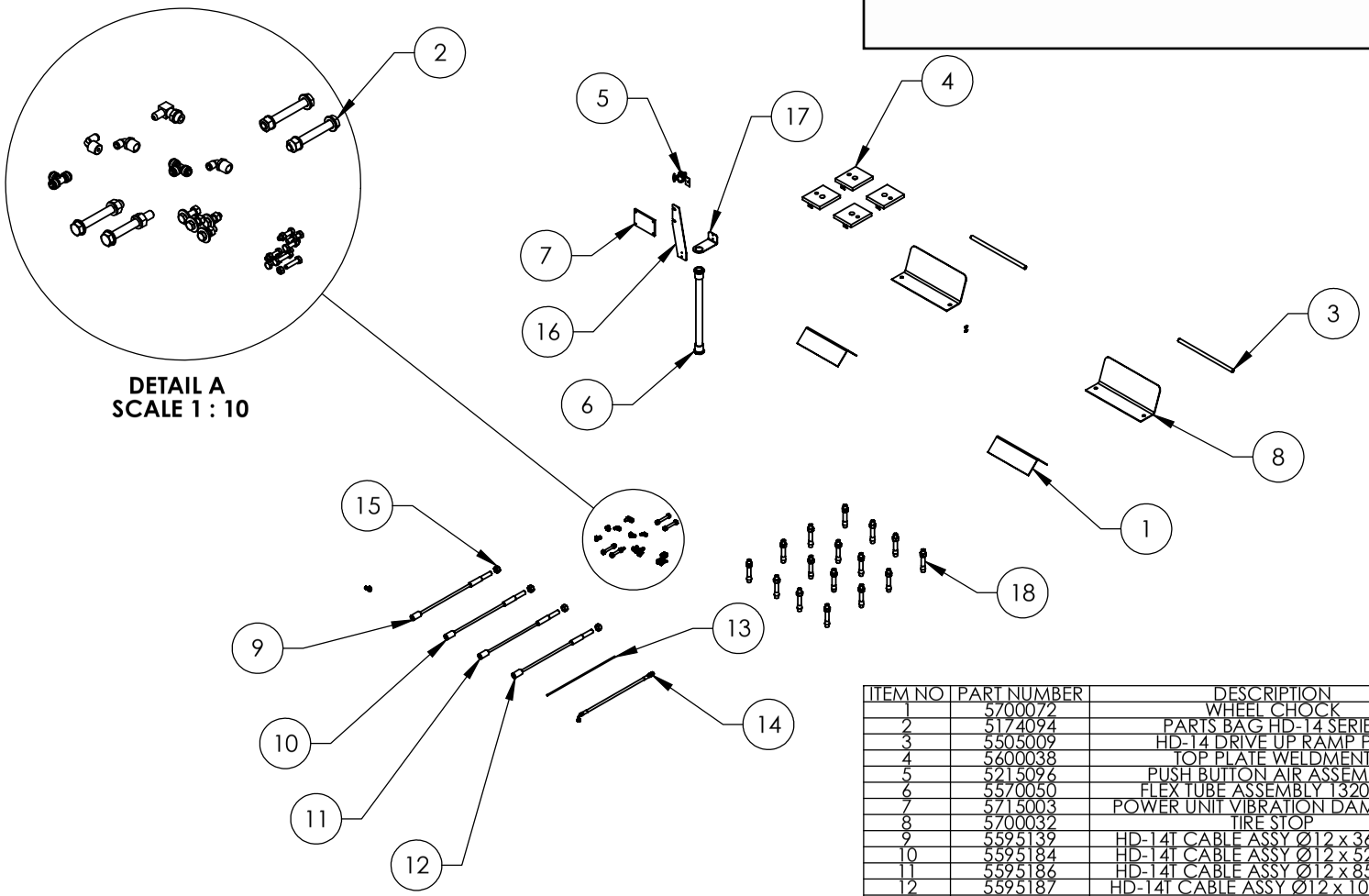

ITEM NO	PART NUMBER	DESCRIPTION	QTY.	REV
1	5700072	WHEEL CHOCK	2	A
2	5174094	PARTS BAG HD-14 SERIES	1	A
3	5505009	HD-14 DRIVE UP RAMP PIN	2	C
4	5600038	TOP PLATE WELDMENT	4	B
5	5215096	PUSH BUTTON AIR ASSEMBLY	1	C
6	5570050	FLEX TUBE ASSEMBLY 1320mm	1	B
7	5715003	POWER UNIT VIBRATION DAMPENER	1	B
8	5700032	TIRE STOP	2	B
9	5595139	HD-14T CABLE ASSY Ø12 x 3665mm	1	A
10	5595184	HD-14T CABLE ASSY Ø12 x 5270mm	1	A
11	5595186	HD-14T CABLE ASSY Ø12 x 8590mm	1	A
12	5595187	HD-14T CABLE ASSY Ø12 x 10190mm	1	A
13	5570795	1/4" POLY-FLO TUBING	17000mm*	-
14	5570025	HYD. HOSE ASSEMBLY Ø6.4 x 3685mm	1	A
15	5535011	NUT M22 x 2.5 NL	4	-
16	5700029	HD-7P/9 FLEX TUBE BRACKET PLATE	1	D
17	5700033	HD-7/9 FLEX TUBE ANGLE	1	D
18	5530456	AB 3/4" x 4 - 3/4"	16	-

NOTE: UNLESS OTHERWISE SPECIFIED.

1. SEE SHIPPING INSTRUCTIONS FOR FINAL PACKAGING
2. THREAD NYLOCK NUTS ONTO CABLES PRIOR TO SHIPMENT
3. HOSES AND CABLES IN REPRESENTATIONAL FORM
4. (*) LENGTHS FOR REFERENCE ONLY

NEXT ASSEMBLY: 5260160

DO NOT SCALE DRAWING

DIMENSIONS ARE IN MM

MATERIAL: ---

SIZE: ---

	NAME	DATE
DRAWN	AC	08/29/2008
CHECKED	TM	03/27/2009

THIRD ANGLE PROJECTION

PROPRIETARY AND CONFIDENTIAL
THE INFORMATION CONTAINED IN THIS DRAWING IS THE SOLE PROPERTY OF **BENDPAK INC.** ANY REPRODUCTION IN PART OR AS A WHOLE WITHOUT THE WRITTEN PERMISSION OF **BENDPAK INC.** IS PROHIBITED.

BendPak. 1645 LEMONWOOD DR. SANTA PAULA, CA 93060

TITLE: PARTS BOX HD-14T

SIZE	DWG. NO.	REV
A	5250307	D

SCALE: 1:35 SHEET 1 OF 1

For Parts Or Service
Contact:

BendPak Inc. / Ranger Products
1645 Lemonwood Dr.
Santa Paula, CA. 93060

Tel: 1-805-933-9970
Toll Free: 1-800-253-2363
Fax: 1-805-933-9160

www.bendpak.com
www.rangerproducts.com

p/n 5900037